DRAWING MADE IN THIRD ANGLE PROJECTION

THIS DRAWING IS UNPUBLISHED. RELEASED FOR PUBLICATION ,19 .

© COPYRIGHT 19 BY AMP INCORPORATED. ALL INTERNATIONAL RIGHTS RESERVED.

LOC	DIST	P	F
CE	16		

REVISIONS

ZONE	LTR	DESCRIPTION	DATE	APPD
	B	REVISED PER 0500-3052	7-15-93	PY/RF

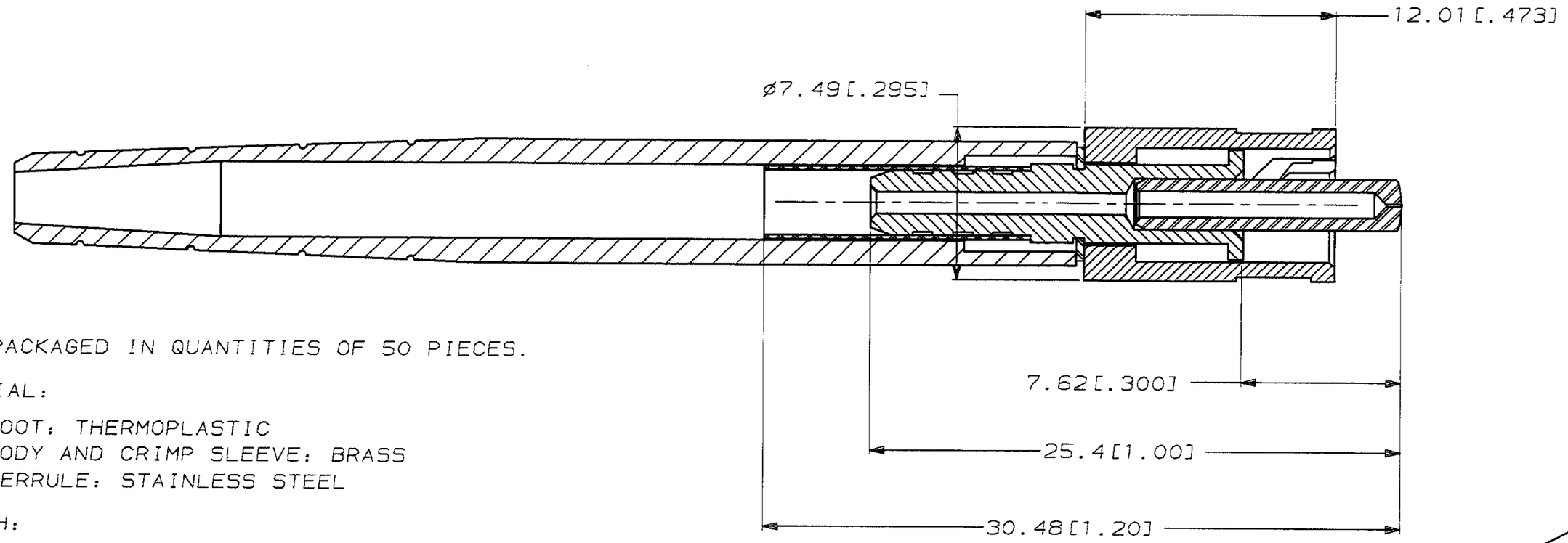

1. BULK PACKAGED IN QUANTITIES OF 50 PIECES.
2. MATERIAL:
   - BOOT: THERMOPLASTIC
   - BODY AND CRIMP SLEEVE: BRASS
   - FERRULE: STAINLESS STEEL
3. FINISH:
   - BODY, CRIMP SLEEVE AND NUT: NICKEL PLATED.

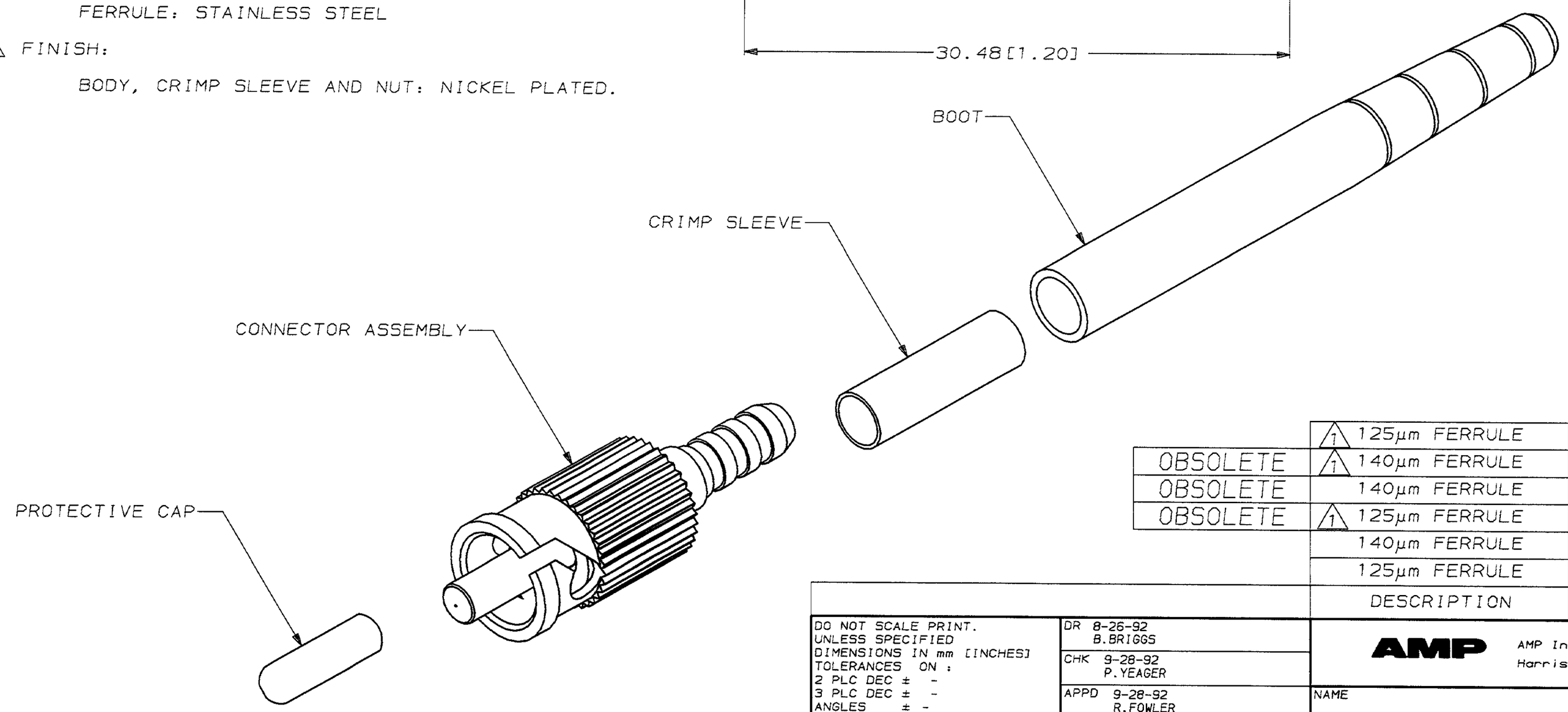

		DESCRIPTION	PART NO
	1	125µm FERRULE	504002-6
OBSOLETE	1	140µm FERRULE	504002-5
OBSOLETE		140µm FERRULE	504002-4
OBSOLETE	1	125µm FERRULE	504002-3
		140µm FERRULE	504002-2
		125µm FERRULE	504002-1

DO NOT SCALE PRINT.
UNLESS SPECIFIED
DIMENSIONS IN mm [INCHES]
TOLERANCES ON :
2 PLC DEC ± -
3 PLC DEC ± -
ANGLES ± -

MATERIAL 2

FINISH 3

DR 8-26-92 B.BRIGGS
CHK 9-28-92 P.YEAGER
APPD 9-28-92 R.FOWLER
APPD 9-28-92 D.FISHER
PRODUCT SPEC -
APPLICATION SPEC -
WEIGHT -

AMP Incorporated
Harrisburg, PA 17105-3608

NAME: ASSEMBLY, MINI BNC CONNECTOR

SIZE	CAGE CODE	DRAWING NO
C	00779	C-504002

SCALE 5:1 SHEET 1 OF 1

METRIC

THIS DRAWING IS A CONTROLLED DOCUMENT FOR AMP INCORPORATED. IT IS SUBJECT TO CHANGE AND THE CONTROLLING ENGINEERING ORGANIZATION SHOULD BE CONTACTED FOR THE LATEST REVISION.

AMP 1471-6 REV 3-92

03-AUG-93 08:45:02 amp12347 /files/wip/amp12347/edmread

CUSTOMER DRAWING

504002