THIS DRAWING AND THE SUBJECT MATTER SHOWN THEREON ARE CONFIDENTIAL AND THE PROPERTY OF BEL/STEWART/TRP CONNECTOR AND SHALL NOT BE REPRODUCED, COPIED, OR USED IN ANY MANNER WITHOUT THE WRITTEN CONSENT OF TRP CONNECTOR.

PRODUCT MAY BE PROTECTED BY ONE OR MORE OF THE FOLLOWING US PATENTS:
5736910 5939955 6425781 6428361 6554638 6840817 7123117
7429195 7717749 7808751 6217391 6149050 7924130

REVISIONS					
P	LTR REV	DESCRIPTION	DATE	DRN	APVD
	H	EC-1411035 COMPANY LOGO CHANGE	30DEC2014	ST	TL

MECHANICAL:

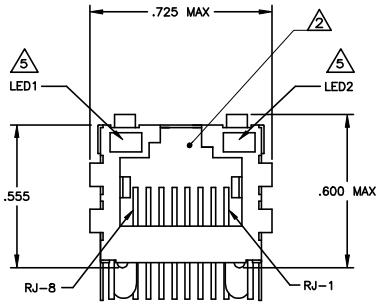

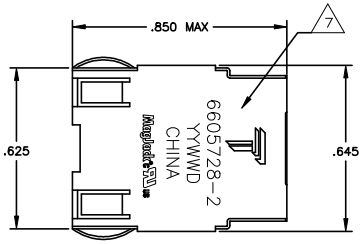

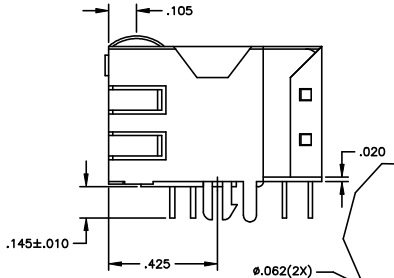

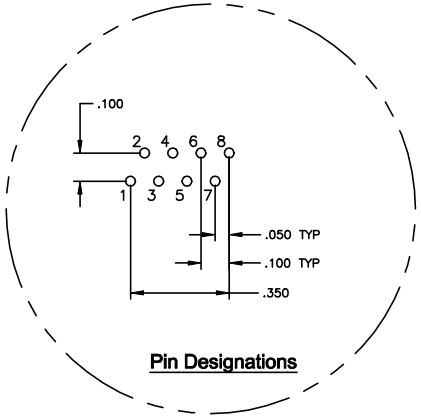

Pin Designations

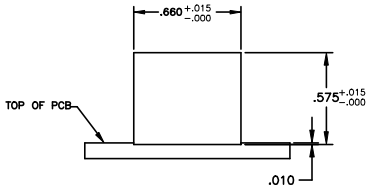

Suggested Panel Cutout

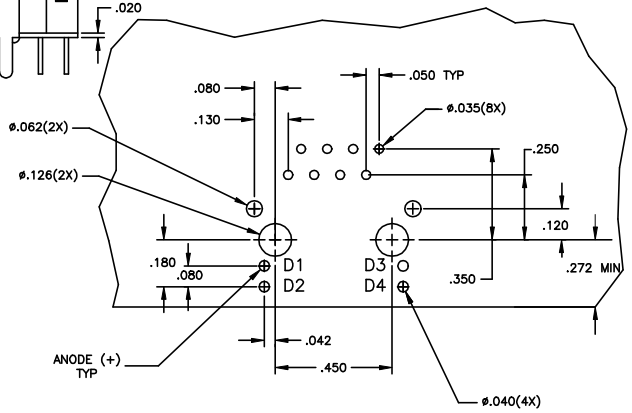

Suggested PCB Layout
(Component Side)

717 SERIES MAGNETIC CIRCUIT 3 6

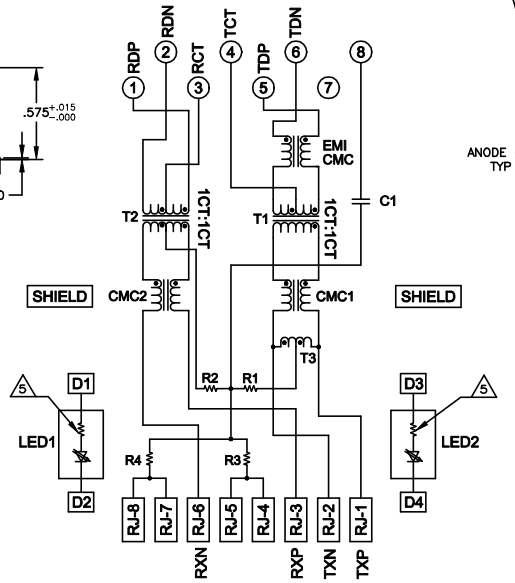

C1 = 1000 pF, 2kV CAPACITOR
R1-R4 = 75 OHMS, 1/16W RESISTORS

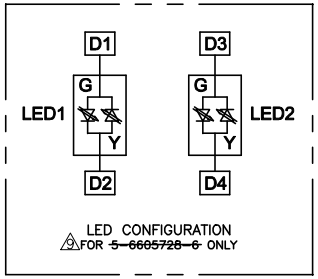

LED CONFIGURATION
9 FOR ~~5-6605728-6~~ ONLY

1 MATERIALS:
HOUSING - THERMOPLASTIC PET POLYESTER FLAMMABILITY RATING UL 94V-0.
SHIELD - .010" THICK, C26800 BRASS PREPLATED WITH 30uINCH SEMI-BRIGHT NICKEL. SOLDER TABS POST DIPPED WITH 100uINCH MIN SAC SOLDER.
MOD JACK CONTACTS - 0.0157 X 0.018" PHOSPHOR BRONZE, 50uINCH MIN OVERALL NICKEL UNDERPLATE, WITH SELECT 50uINCH MIN HARD GOLD FINISH PLATE SOLDERTAILS WITH 100uINCH MIN MATTE TIN AND/OR SAC SOLDER DIP.
LIGHT EMITTING DIODE(LED) - DIFFUSED EPOXY LENS, .020" x .020" CARBON STEEL WIREFRAME LEADS PRE-PLATED WITH 80uINCH SILVER OVER 40uINCH NICKEL UNDERPLATE OVER 40uINCH COPPER UNDERPLATE. POST-PLATED WITH 100uINCH MIN MATTE TIN AND/OR SAC SOLDER DIP OR PURE TIN SOLDER DIP.

2 RJ45 JACK CAVITY CONFORMS TO FCC RULES AND REGULATIONS PART 68, SUB PART F.

3 MAGNETICS
-IMPEDANCE: 100 OHMS
-TURNS RATIO (CHIP:CABLE): TX = 1:1, RX = 1:1
-OPEN CIRCUIT INDUCTANCE (OCL): 350uH MIN @100kHz, 0.1VRMS, 8mADC BIAS FROM 0°C TO 70°C, TX AND RX
-PERFORMANCE @ 25°C:
INSERTION LOSS (IL): 1.1dB MAX FROM 0.5MHz TO 100MHz
RETURN LOSS (RL): 18dB MIN FROM 0.5MHZ TO 30MHz
18-20LOG(f/30)dB MIN FROM 30.1MHz TO 60MHz
12dB MIN FROM 60.1MHz TO 80MHz
CROSSTALK ATTENUATION: 35dB MIN FROM 0.5MHz TO 40MHz
33-20LOG(f/50)dB MIN FROM 40.1MHz TO 100MHz
COMMON MODE REJECTION RATIO (CMRR): 30dB MIN FROM 0.5MHz TO 100MHz
-ISOLATION VOLTAGE: 2250VDC (MAX) FOR 60 SECONDS WITH A RISE TIME OF 500V/SEC. FOR 5-6605728-1,5-6605728-2,5-6605728-6,5-6605728-8,5-6605728-9, 6-6605728-1,6-6605728-2
1500VAC (MAX) AT 60Hz FOR 60 SECS. FOR 6605728-2,6605728-9,1-6605728-1

4. OPERATING TEMPERATURE: FROM 0°C TO +70°C

5 THE 250 OHM LED RESISTORS ARE OPTIONAL, PLEASE SEE CHART FOR PRESENCE OR ABSENCE OF LED RESISTORS. IF THE LED WITHOUT 250 OHM RESISTORS, LED IS DRIVEN WITH CONSTANT CURRENT AT APPROX 20mA.LED COLOR:
DOMINANT WAVELENGTH (λD): GREEN 568 nm TYP. @ IF=20mA
FORWARD VOLTAGE (VF): GREEN 2.2V TYP. @ IF=20mA
DOMINANT WAVELENGTH (λD): YELLOW 588 nm TYP. @ IF=20mA
FORWARD VOLTAGE (VF): YELLOW 2.1V TYP. @ IF=20mA.
DOMINANT WAVELENGTH (λD): ORANGE 605 nm TYP. @ IF=20mA
FORWARD VOLTAGE (VF): YELLOW 2.1V TYP. @ IF=20mA.
IF THE LED WITH 250 OHM RESISTORS,LED IS DRIVEN WITH 5V VOLTAGE AND THE MAX OPERATING CURRENT IS 20mA.LED COLOR:
DOMINANT WAVELENGTH (λD): GREEN 568 nm TYP. @ VF=5V
FORWARD CURRENT (IF): GREEN 12 mA TYP. @ VF=5V
DOMINANT WAVELENGTH (λD): YELLOW 588 nm TYP. @ VF=5V
FORWARD CURRENT (IF): YELLOW 13 mA TYP. @ VF=5V

6 INDICATED CONNECTIONS ARE FOR NIC CONFIGURATION. THE MAGNETICS ARE ASYMMETRICAL AND DO NOT SUPPORT AUTO-MDI/MDIX.

7 TRP CONNECTOR LOGO, PART NUMBER, DATE CODE, COUNTRY OF ORIGIN AND AGENCY APPROVAL MARKING IN APPROXIMATE LOCATION SHOWN.

8. THESE PARTS ARE RECOMMENDED FOR WAVE SOLDERING PROCESS,PREHEAT TEMPERATURE IS 120°C TO 160°C, 120 SECONDS TO 180 SECONDS,PEAK WAVE SOLDERING TEMPERATURE IS 260°C MAX,10 SECONDS MAX.

9 OBSOLETE PARTS: OBSOLETE CIS STREAMLINING PER D.RENAUD/D.SINISI

	LED RESISTORS	2KV DECOUPLING CAPACITOR	LED1 5	LED2 5	PART NUMBER
OBSOLETE 9	NO	YES	GREEN	ORANGE	~~6-6605728-2~~
	YES	YES	GREEN	GREEN	~~6-6605728-1~~
	NO	YES	YELLOW	GREEN	~~5-6605728-9~~
OBSOLETE	NO	YES	GREEN	YELLOW	~~5-6605728-8~~
9 OBSOLETE	NO	YES	GREEN/YELLOW	GREEN/YELLOW	~~5-6605728-6~~
	YES	YES	YELLOW	GREEN	5-6605728-2
	YES	YES	GREEN	YELLOW	5-6605728-1
9 OBSOLETE	YES	NO	GREEN	GREEN	~~1-6605728-1~~
	YES	NO	YELLOW	GREEN	6605728-9
	YES	NO	GREEN	YELLOW	6605728-2

THIS DRAWING IS A CONTROLLED DOCUMENT.

DIMENSIONS: INCHES

TOLERANCES UNLESS OTHERWISE SPECIFIED:
0 PLC ± -
1 PLC ± -
2 PLC ± 0.010
3 PLC ± 0.005
4 PLC ± -
ANGLES ± -

PRODUCT SPEC 108-2100
APPLICATION SPEC -

DRN G. ATTADIA - DOCKS 10MAR2005
CHK D. FAROLE 10MAR2005
APVD D. FAROLE 10MAR2005
MODEL NAME MAGJACK SINGLE NON-POE

trp CONNECTOR a bel group — DONGGUAN CHINA

DESC 1X1 717 10/100 TAB UP W/ LED

SIZE A1 | CAGE CODE | DRAWING NO C-6605728 | RESTRICTED TO —

CUSTOMER DRAWING | SCALE NTS | SHEET 1 OF 1 | REV H