DATE	REV	ECN	APP'D. BY
–	A3	5302	–
–	A4	5970	–
1–20–06	A5	7451	JM
4–11–06	A6	7579	TRM

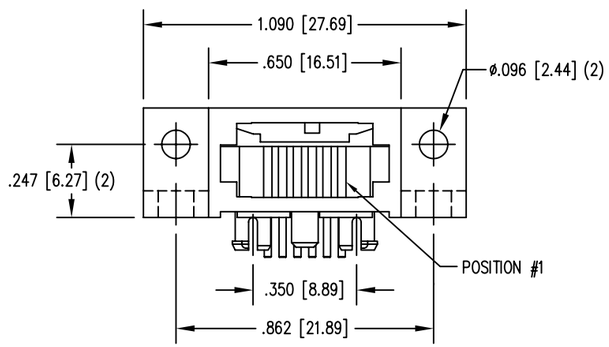

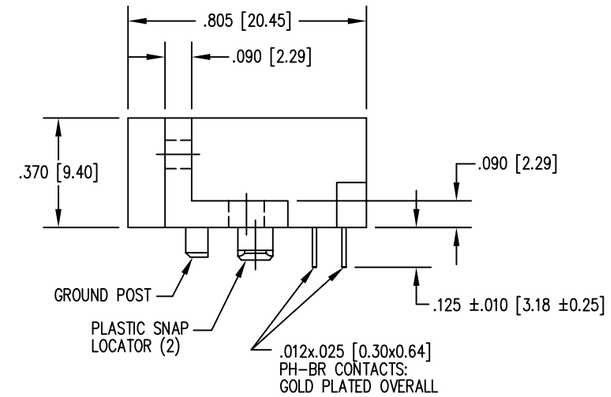

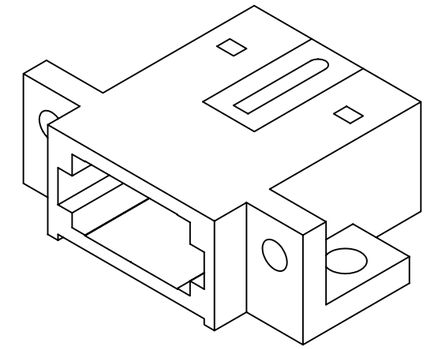

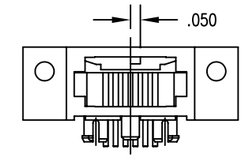

DIMENSIONS FOR KEY–5

NOTES:

1. CONNECTOR MATERIALS:
   HOUSING: THERMOPLASTIC UL94 V–0
   SHIELD: DIE CAST ALLOY
   CONTACTS: COPPER ALLOY
   SHIELD PLATING: TIN
   CONTACT PLATING: SELECTIVE GOLD IN CONTACT AREA
   SEE CHART FOR PART NUMBER
2. FOR PRODUCT SPECIFICATIONS SEE PR026–01.
3. TOLERANCES ARE ±006 [0.15] UNLESS OTHERWISE NOTED .

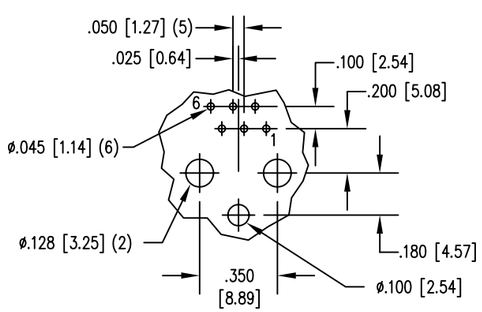

PC BOARD TOP VIEW

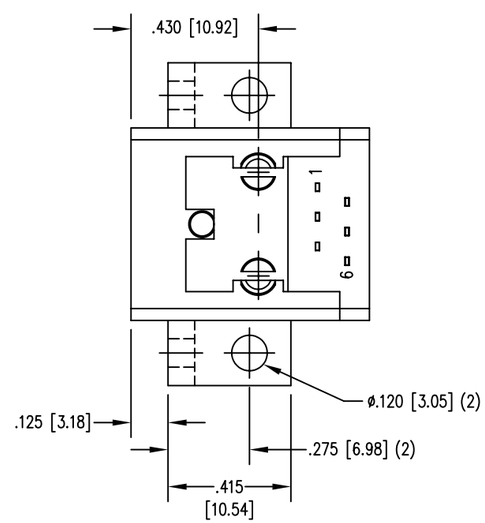

50 MICRO–INCHES [1.27um]	SS–610606–LF–P–5–A58
30 MICRO–INCHES [0.76um]	SS–610606–LF–P–5–4/6
CONTACT PLATING IN MATING AREA	PART NUMBER

RoHS 2002/95/EC

THIRD ANGLE PROJECTION

DO NOT SCALE DRAWING

DRAWING IS SUBJECT TO CHANGE WITHOUT NOTICE

DIMENSIONS: INCHES [METRIC]

UNLESS OTHERWISE SPECIFIED TOLERANCES ARE ±.005 [0.13] ANGLES ARE ± 1°

SHEET NO. 1 OF 1

Bel Stewart Connector

11118 Susquehanna Trail South
Glen Rock, PA 17327–9199
(717) 235–7512 Fax: (717) 235–7954 http://www.stewartconnector.com

TITLE: 6 CONTACT COMPU–SHIELD JACK
#4–40 TAP ON ø.096 HOLES AND #6–32 TAP ON ø.120 HOLES

THIS DRAWING AND THE SUBJECT MATTER SHOWN THEREON ARE CONFIDENTIAL AND THE PROPRIETARY PROPERTY OF BEL STEWART CONNECTOR AND SHALL NOT BE REPRODUCED, COPIED, OR USED IN ANY MANNER WITHOUT PRIOR WRITTEN CONSENT OF BEL STEWART CONNECTOR. THE SUBJECT MATTER MAY BE PATENTED OR A PATENT MAY BE PENDING.

DRN BY:	BK	DATE	2–14–95
APPD BY:	JW	DATE	2–14–95
DWG NO.	CT610013	REV.	A6

REV. 6/3/05

AutoCAD