THIS DRAWING IS UNPUBLISHED. RELEASED FOR PUBLICATION -,- .
© COPYRIGHT - By - ALL RIGHTS RESERVED.

LOC	DIST
—	—

REVISIONS

P	LTR	DESCRIPTION	DATE	DWN	APVD
	C1	DRAWING TITLE CORRECTION	19NOV2015	KJK	PS

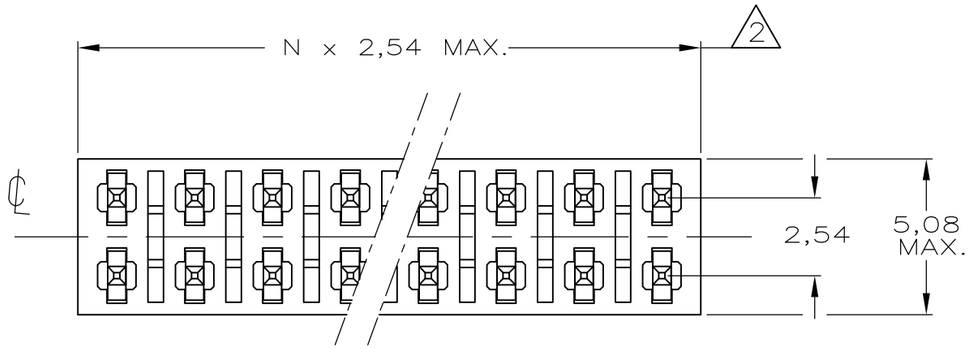

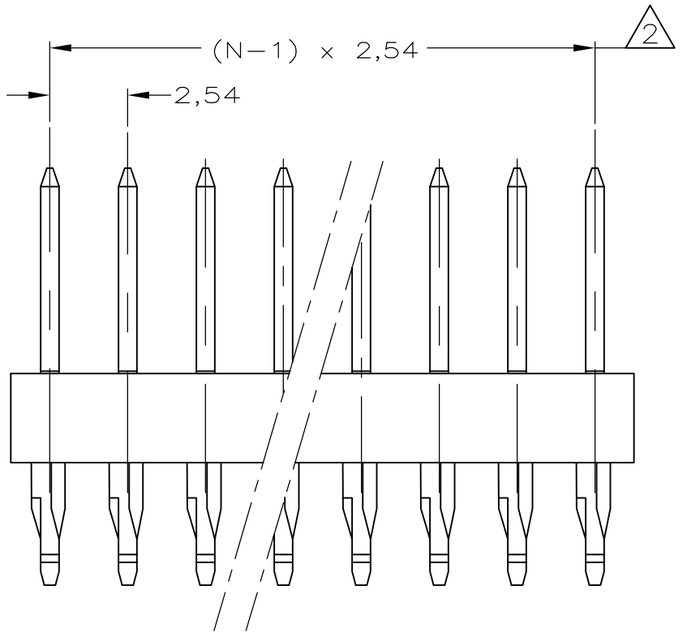

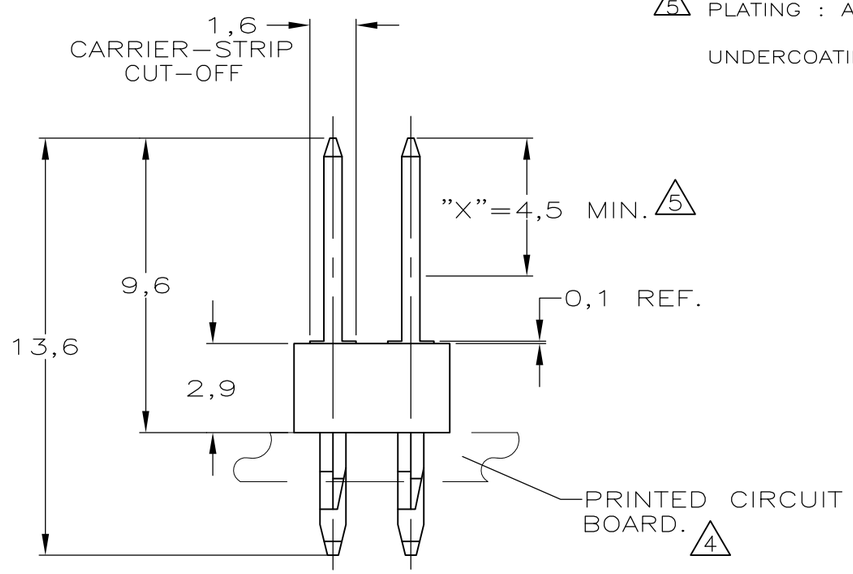

NOTES:

1. CONTACT HOUSING RETENTION FORCE >1,5 N

2. TO DETERMINE DIMENSIONS TAKE N = Nr. OF POSITIONS.
FOR EXAMPLE 10 POS. : N x 2,54 = 25,40 mm

3. MATERIAL HOUSING : GREEN GLASSFILLED POLYESTER.
MATERIAL CONTACT : PHOSPHOR BRONZE
FOR ORDERNR. USE BASIC NR. + NR OF POSITIONS.
FOR EXAMPLE : 2 POS.= 215447−2 (SHORTEST VERSION)
40 POS.=4−215447−0 (LONGEST VERSION)

4. ACTION PIN SUITABLE FOR 1,6mm MIN. P.C.BOARD THICKNESS.

5. PLATING : AREA "X" Au−PLATED 0,76μm THICKNESS.
ACTION−PIN AREA, Sn PLATED 1,27μm THICKNESS.
UNDERCOATING : 1,27μm Ni ALL OVER.

P.C.B. HOLE DIM. ACTION PIN				
DRILLED HOLE	:1,15	±0,025		mm
FIN. HOLE	:0,94	to	1,09	mm
AFTER REFLOW	:0,91	to	1,09	mm
Cu−thks	:0,025	to	0,075	mm
Sn−thks	: 0,004	to	0,010	mm

THIS DRAWING IS A CONTROLLED DOCUMENT.

DIMENSIONS: mm

TOLERANCES UNLESS OTHERWISE SPECIFIED: ±0.2mm

0 PLC	± –
1 PLC	± –
2 PLC	± –
3 PLC	± –
4 PLC	± –
ANGLES	± –

MATERIAL: SEE NOTES

FINISH: SEE NOTES

DWN L.V.D.HEIJDEN 01.02.1988
CHK P.V.D.HAGEN –
APVD —
PRODUCT SPEC —
APPLICATION SPEC —
WEIGHT —

TE Connectivity

NAME: MOD II ACTION PIN HEADER, DUAL ROW

SIZE	CAGE CODE	DRAWING NO	RESTRICTED TO
A3	00779	C-215447	—

CUSTOMER DRAWING

SCALE	SHEET	REV
5:1	1 OF 1	C1