THIS DRAWING IS UNPUBLISHED. RELEASED FOR PUBLICATION -,- .
© COPYRIGHT - BY TYCO ELECTRONICS CORPORATION. ALL RIGHTS RESERVED.

LOC	DIST
G	14

REVISIONS

P	LTR	DESCRIPTION	DATE	DWN	APVD
	L1	REV PER ECR 09-023200	27OCT09	JR	TM

AMP WIRE RANGE	Listed FILE E13288	LR7189 Certified
16-14 AWG SOLID OR STRANDED	16-14 AWG SOLID OR STRANDED	16-14 AWG SOLID OR STRANDED

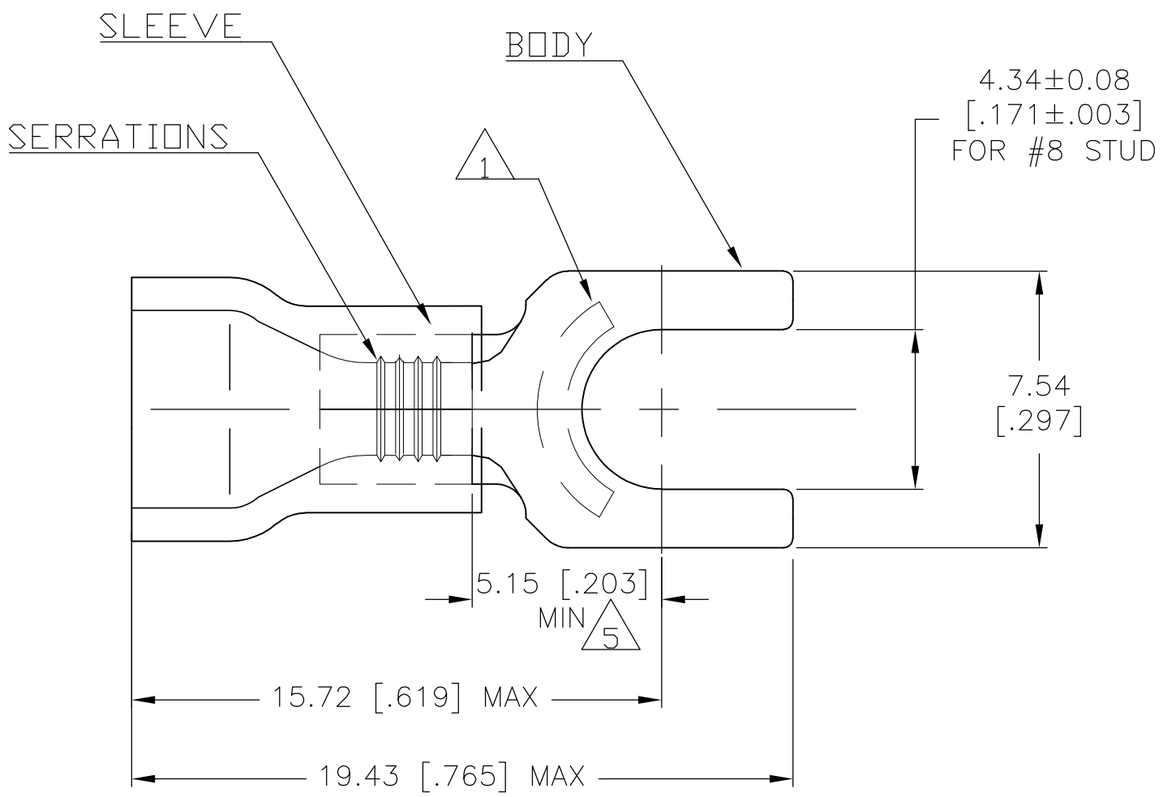

1. STAMP AMP 16-14* LOCATE APPROX AS SHOWN
2. WIRE INSUL DIA., 3.00-4.90 [.118-.193]
3. TONGUE MATL THK, 0.79 ±0.05 [.031±.002]
4. MATERIAL: BODY - CU PER ASTM B152
   SLEEVE - PVC, COLOR - BLUE
5. APPLIES FROM THE METAL EDGE OF BARREL TO THE CENTER OF THE STUD HOLE

QTY	PACKAGE TYPE	PART NO
5000	ON TAPE, REEL	2-326741-1
1000	LOOSE PIECE	326741

AMP INCORPORATED
CUSTOMER SERVICE SYSTEMS

FOR ADDITIONAL PRODUCT INFORMATION OR COPIES OF DRAWINGS AND TECHNICAL DOCUMENTS	PRODUCT INFORMATION CENTER 1-800-522-6752
FOR APPLICATION TOOLING INFORMATION	TOOLING ASSISTANCE CENTER 1-800-722-1111
FOR ORDER ENTRY	1-800-526-5142

THIS DRAWING IS A CONTROLLED DOCUMENT FOR AMP INCORPORATED. IT IS SUBJECT TO CHANGE AND THE CONTROLLING ENGINEERING ORGANIZATION SHOULD BE CONTACTED FOR THE LATEST REVISION.

MAX RECOMMENDED OPERATING TEMPERATURE: 105°C [221° F]

VOLTAGE RATING: 600V MAX (1000V FIXTURE OR SIGN)

CIRCULAR MIL AREA: 1.04-2.62mm² [2,050-5,180] SOLID OR STRANDED

THIS DRAWING IS A CONTROLLED DOCUMENT.

DIMENSIONS: mm [INCHES]

TOLERANCES UNLESS OTHERWISE SPECIFIED:

0 PLC	± -
1 PLC	± -
2 PLC	± 0.20 [.008]
3 PLC	± -
4 PLC	± -
ANGLES	± -

MATERIAL - 4

FINISH -

DWN	L OLMEDA	03NOV94
CHK	M ELLIS	03NOV94
APVD	G NGO	03NOV94
PRODUCT SPEC	UL486A	
APPLICATION SPEC	-	
WEIGHT	-	

Tyco Electronics
Tyco Electronics Corporation
Harrisburg, Pa 17105-3608

NAME: TERMINAL, SPADE, PLASTI-GRIP, WIRE SIZE: 16-14

SIZE	CAGE CODE	DRAWING NO	RESTRICTED TO
A3	00779	C-326741	-

CUSTOMER DRAWING | SCALE 6:1 | SHEET 1 OF 1 | REV L1