	COUNT	DESCRIPTION OF REVISIONS	BY	CHKD	DATE		COUNT	DESCRIPTION OF REVISIONS	BY	CHKD	DATE
△					. .	△					. .
△						△					. .
△						△					. .

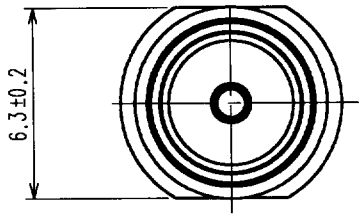

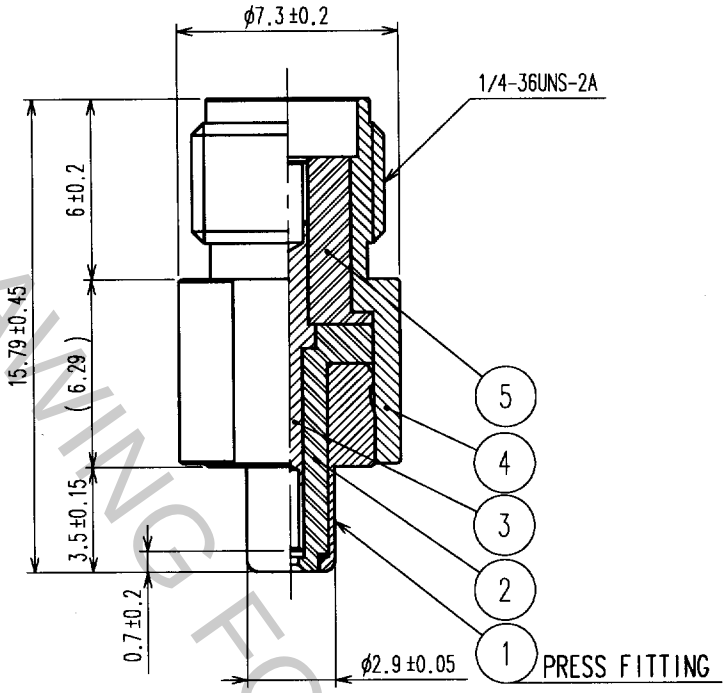

NOTE
1. PLEASE USE THIS AS A INSPECTION PLUG, MATING WITH MS-151-C(LP).

NO.	MATERIAL	FINISH, REMARKS	NO.	MATERIAL	FINISH, REMARKS
3	BERYLLIUM COPPER	GOLD PLATING			
2	PTFE		5	PTFE	
1	PHOSPHOR BRONZE	NICKEL PLATING	4	STAINLESS STEEL	PASSIVATE

CODE NO.(OLD)	DRAWN	DESIGNED	CHECKED	APPROVED	RELEASED
CL	Yamaguchi 04.8.24	Yamaguchi 04.8.24	R. Kano 04.8.26	Kawamura	

TO
RFD

SCALE 4 : 1
UNITS mm

DRAWING NO. EDC4-180214

PART NO. MS151J-HRMJ

HRS HIROSE ELECTRIC CO.,LTD.

CODE NO. CL355-0088-4

1/1

FORM NO.228

HRS DRAWING FOR REFERENCE

Feb.1.2018 Copyright 2018 HIROSE ELECTRIC CO., LTD. All Rights Reserved.