THIS DRAWING IS UNPUBLISHED. RELEASED FOR PUBLICATION - , .
© COPYRIGHT By - ALL RIGHTS RESERVED.

LOC	DIST
CM	00

REVISIONS

P	LTR	DESCRIPTION	DATE	DWN	APVD
	AF	REVISED PER ECO-12-016930	050CT12	KH	SM

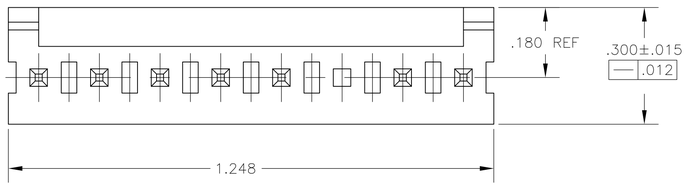

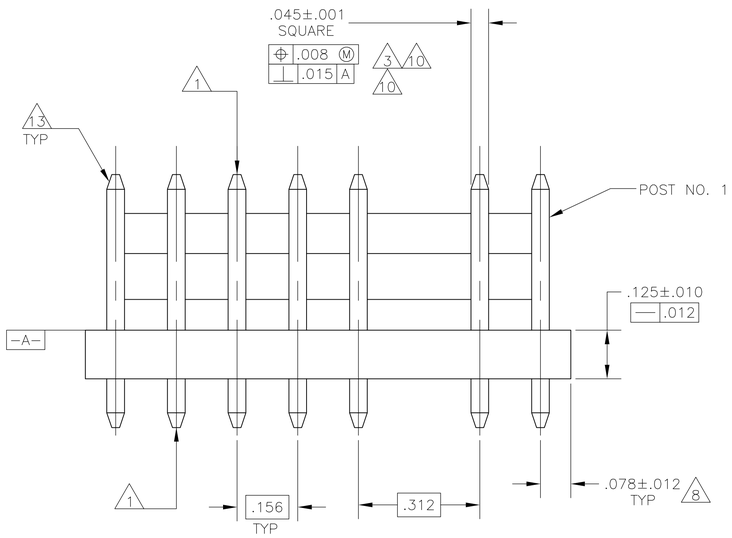

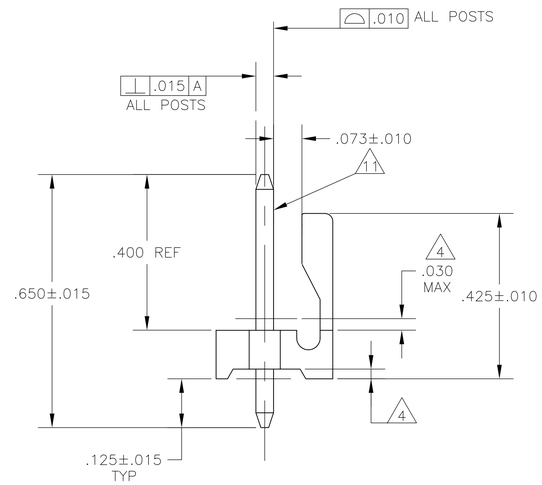

1. POST TO WITHSTAND 13 NEWTONS (3LBS.) MIN. AXIAL FORCE IN BOTH DIRECTIONS SHOWN WITHOUT DISLODGING.
2. TOLERANCES APPLY TO SOLDER SIDE OF BOARD.
3. MEASURED AT SURFACE -A-
4. PLASTIC FLASH PERMITTED IN THIS AREA.
5. PARTS COMPLY WITH AMP SOLDERABILITY SPEC. NO. 109-11-2.
6. ONE HOLE MAY BE UNDERSIZED (.065/.060 DIA.) FOR ASSEMBLY RETENTION DURING WAVE SOLDERING.
7. MATERIAL: HEADER-THERMOPLASTIC POLYESTER GLASS-FILLED 94V-0 (NATURAL)
   POST-COPPER ALLOY (TIN PLATED)
8. COORDINATE DIMENSION APPLIES FROM CENTER OF ACTUAL FEATURE.
9. PLASTIC BURRS CAUSED BY CUT-OFF TOOLING ARE PERMITTED WITHIN THE MAXIMUM TOLERANCE ENVELOPE.
10. POST TO BE MEASURED WHEN STRIP IS HELD FLAT.
11. POST MUST WITHSTAND TWO 90° BENDS AGAINST EXTRUSION WITHOUT BREAKING.
12. DIMENSION SHOULD BE .175 MIN WHEN MATING WITH A MTA 156 CONNECTOR ASSEMBLY OR A SL-156 CONNECTOR ASSEMBLY.
13. PIN BURR OF .005 MAX. VERTICAL AND .003 MAX. HORIZONTAL PERMITTED AT POST TIPS ON BOTH ENDS.
14. SPECIAL PACKAGING VARIATION FOR IMPROVED PRODUCT PROTECTION.
15. PRELIMINARY PART - NOT FOR PRODUCTION.

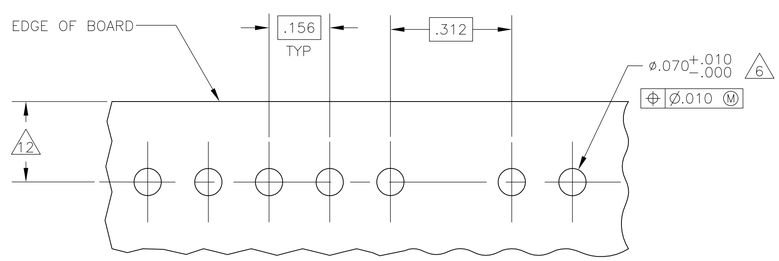

RECOMMENDED MOUNTING HOLE PATTERN FOR .063 THICK P.C. BOARD 2

641922-2 SHOWN

		1.248	31.70
.065	1.65	.700	17.78
.063	1.60	.450	11.43
.060	1.52	.425	10.80
.045	1.14	.312	7.92
.030	0.76	.300	7.62
.015	0.38	.180	4.57
.012	0.30	.175	4.45
.010	0.25	.156	3.96
.008	0.20	.125	3.18
.005	0.13	.078	1.98
.003	0.08	.070	1.78
.001	0.03	.068	1.73
[IN]	MM	[IN]	MM

CONVERSION TABLE

POST NUMBER OMITTED	PART NUMBER
2	2-641922-3
3 & 4	1-641922-4
5	1-641922-3
3,4,6,7	1-641922-2
5 & 7	1-641922-1
3,5,8	1-641922-0
1,3,5,7	641922-9
6	641922-8
7	641922-7
4 & 6	641922-6
2,5,7	641922-5
2	641922-3
3	641922-2
4	641922-1

THIS DRAWING IS A CONTROLLED DOCUMENT.

DIMENSIONS: INCHES

TOLERANCES UNLESS OTHERWISE SPECIFIED:
0 PLC ±
1 PLC ±
2 PLC ±
3 PLC ± .005
4 PLC ±
ANGLES ±

MATERIAL 7 FINISH 7

DWN S. HOOVER 07NOV02
CHK D. BOSSI 07NOV02
APVD D. BOSSI 07NOV02
PRODUCT SPEC
APPLICATION SPEC
WEIGHT

TE Connectivity

NAME MTA-.156 HEADER ASSEMBLY, FRICTION LOCK, STRAIGHT .045 SQUARE POST, TIN PLATED, 8 POSITION, OMITTED POST

SIZE	CAGE CODE	DRAWING NO	RESTRICTED TO
A1	00779	C-641922	-

CUSTOMER DRAWING SCALE 5:1 SHEET 1 OF 1 REV AF

4805 (3/11)