DRAWING MADE IN AMERICAN PROJECTION

©1968 BY AMP INCORPORATED. ALL RIGHTS RESERVED. AMP PRODUCTS COVERED BY PATENTS AND/OR PATENTS PENDING.

REVISIONS

ZONE	LTR	DESCRIPTION	DATE	APPROVED
	—	REF SD 25855 L.G.	7-22-68	
	A	REVISED CUSTOMER MARKING NOTE LAB	10-15-73	HPA
	B	REVISED PER ECN S-3960	4-10-87	RS
	C	REV PER OH14-0192-05	1-06	PY

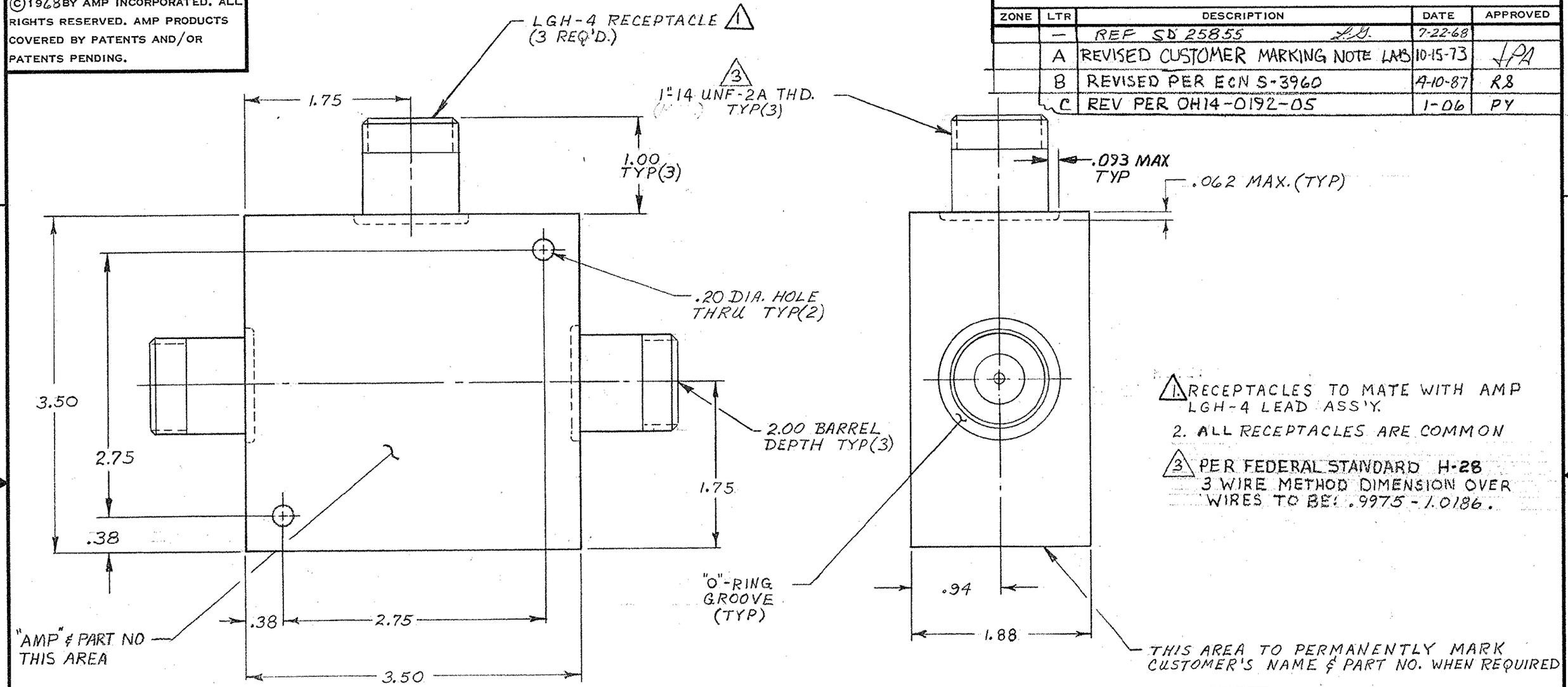

1. RECEPTACLES TO MATE WITH AMP LGH-4 LEAD ASS'Y.
2. ALL RECEPTACLES ARE COMMON
3. PER FEDERAL STANDARD H-28 3 WIRE METHOD DIMENSION OVER WIRES TO BE: .9975 - 1.0186.

QTY REQD	QTY REQD	ITEM NO.	DWG SIZE	PART OR IDENTIFYING NO.	NOMENCLATURE OR DESCRIPTION	SYMBOL
-2	-1					

PARTS LIST

PART NO	DESCRIPTION	NEXT ASSY	FINAL ASSY	NEXT ASSY	USED ON
5-850554-1	AS SHOWN, TIN PLATED PINS				
850554-1	AS SHOWN, TIN-LEAD PLATED PINS				

QTY REQD — APPLICATION

PRINT DIST L37

UNLESS OTHERWISE SPECIFIED: DIMENSIONS ARE IN INCHES
TOLERANCES .00 = ±.04 ANGLES ± .000 = ±.015

MATERIAL: EPOXY

FINISH: NATURAL

CONTRACT NO.

DR L. Gelb 7-22-68

CHK

APPD

APPD

DSGN APPD J W Gaw 7-25 68

OTHER APPD

AMP INCORPORATED
CAPITRON DIVISION
ELIZABETHTOWN, PENNSYLVANIA

NAME "T" CONNECTOR LGH-4

SIZE	CODE IDENT NO.	NUMBER
B	00779	850554

SCALE 5-1 | W.T | SHEET 1 OF 1

CUSTOMER DRAWING

AMP 1470 REV 8/66