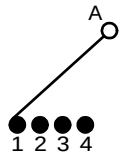

CONTACT CONFIGURATION
TIMING (BBM) NON-SHORTING

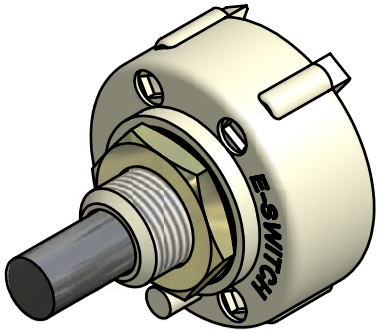

ISOMETERIC

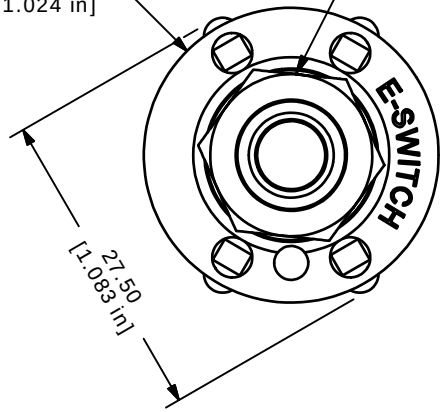

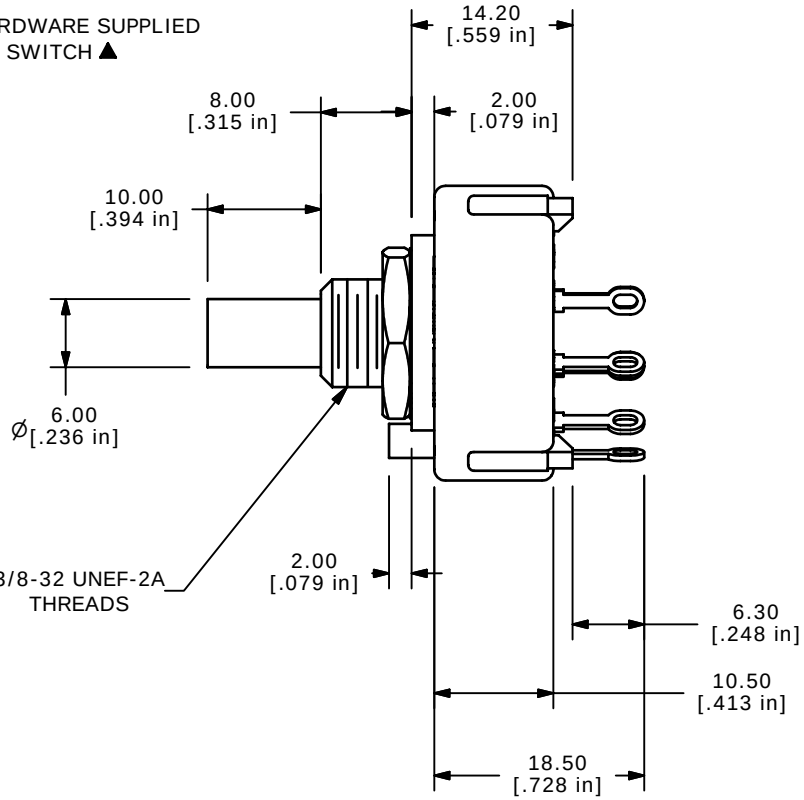

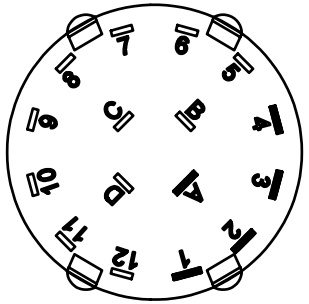

NOTE:
1. ALL DIMENSIONS IN MM[INCH].
2. GENERAL TOLERANCE: X.X=± 0.4
   X.XX=± 0.25
3. TERM. NOS. FOR REFERENCE ONLY.
4. CONTACT MATERIAL: SILVER
5. CONTACT RATING: 350mA @ 125VAC
6. OPERATING FORCE: 500± 200 gm-cm
7. OPERATING TEMP: -30˚C TO 85˚C
▲ 8. CIRCUIT SP: 4 POSITION 30˚ INDEX.
9. DIELECTRIC STRENGTH: 500VAC FOR 1 MIN.
▲10. HARDWARE SUPPLIED ON SWITCH:
   LOCKWASHER, HEXNUT, STOP RING
11. ▲ DENOTES CRITICAL PARAMETER.

REV	PCR NO	DESCRIPTION	DATE	BY
A	15255	RELEASED FOR PRODUCTION	9/12/05	PH

THE INFORMATION CONTAINED IN THIS DOCUMENT IS PROPRIETARY TO E-SWITCH AND IS NOT TO BE COPIED OR TRANSFERRED

E-SWITCH®

TITLE	SCALE	DATE	DR	DWG	REV
KC14B10.001NLS	1.5:1	9/12/2005	PH	G527964	A