THIS DRAWING IS UNPUBLISHED. RELEASED FOR PUBLICATION - ,- .
© COPYRIGHT - By - ALL RIGHTS RESERVED.

LOC	DIST
AD	39

REVISIONS

P	LTR	DESCRIPTION	DATE	DWN	APVD
	L	REVISED PER ECO-14-000068	26APR2014	NK	MM

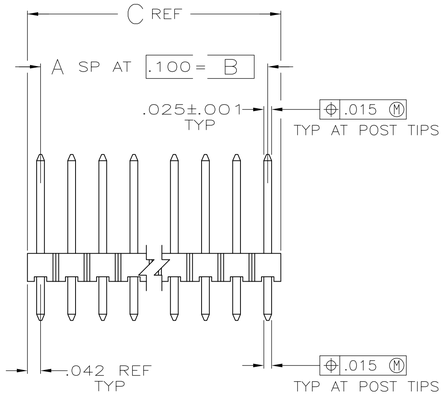

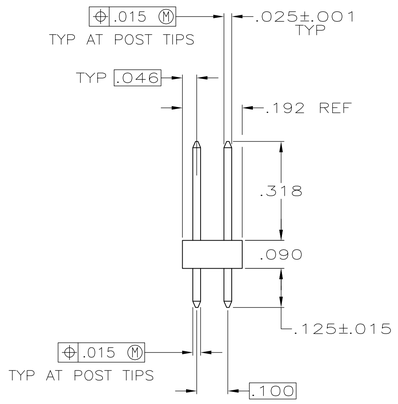

1 TRUE POSITION TOLERANCE OF THE POST TIPS APPLIES WHEN THE HEADERS ARE HELD FLAT AGAINST THE PRINTED CIRCUIT BOARD

2 ASSEMBLY MAY BE BROKEN TO THE DESIRED NUMBER OF POSITIONS

3 .000100-.000200 MATTE TIN-LEAD OVER .000050 NICKEL.

4 .000100-.000200 BRIGHT TIN OVER .000050 NICKEL.

5 PRELIMINARY PART - NOT RELEASED FOR PRODUCTION.

6 HOUSING MATERIAL: FLAME RETARDANT THERMOPLASTIC; COLOR-BLACK.

7 OBSOLETE PARTS: OBSOLETE CIS STREAMLINING PER D.RENAUD/D.SINISI

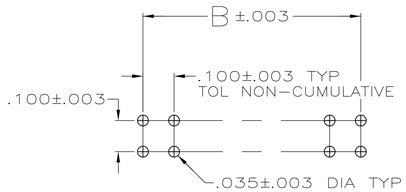

RECOMMENDED HOLE LAYOUT

		PLATING	C	B	A	NO OF POSN	PART NUMBER
5	4		1.684	1.600	16	34	4-103322-7
5	4		1.184	1.100	11	24	4-103322-6
5	4		.584	.500	5	12	4-103322-5
OBSOLETE	4		.284	.200	2	6	4-103322-4
5	4		.084	—	—	2	4-103322-3
	4		3.984	3.900	39	80	4-103322-2
5	4		.484	.400	4	10	4-103322-1
	3		3.984	3.900	39	80	4-103322-0
7 OBSOLETE	3		3.884	3.800	38	78	3-103322-9
7 OBSOLETE	3		3.784	3.700	37	76	3-103322-8
7 OBSOLETE	3		3.684	3.600	36	74	3-103322-7
7 SUPERSEDED BY 8-146250-6	3		3.584	3.500	35	72	3-103322-6
7 OBSOLETE	3		3.484	3.400	34	70	3-103322-5
7 OBSOLETE	3		3.384	3.300	33	68	3-103322-4
7 OBSOLETE	3		3.284	3.200	32	66	3-103322-3
7 OBSOLETE	3		3.184	3.100	31	64	3-103322-2
7 OBSOLETE	3		3.084	3.000	30	62	3-103322-1
7 OBSOLETE	3		2.984	2.900	29	60	3-103322-0
7 OBSOLETE	3		2.884	2.800	28	58	2-103322-9
7 OBSOLETE	3		2.784	2.700	27	56	2-103322-8
7 OBSOLETE	3		2.684	2.600	26	54	2-103322-7
7 OBSOLETE	3		2.584	2.500	25	52	2-103322-6
	3		2.484	2.400	24	50	2-103322-5
7 OBSOLETE	3		2.384	2.300	23	48	2-103322-4
7 OBSOLETE	3		2.284	2.200	22	46	2-103322-3
7 OBSOLETE	3		2.184	2.100	21	44	2-103322-2
7 OBSOLETE	3		2.084	2.000	20	42	2-103322-1
7 SUPERSEDED BY 7-146250-0	3		1.984	1.900	19	40	2-103322-0
7 OBSOLETE	3		1.884	1.800	18	38	1-103322-9
7 OBSOLETE	3		1.784	1.700	17	36	1-103322-8
7 OBSOLETE	3		1.684	1.600	16	34	1-103322-7
7 OBSOLETE	3		1.584	1.500	15	32	1-103322-6
7 OBSOLETE	3		1.484	1.400	14	30	1-103322-5
7 OBSOLETE	3		1.384	1.300	13	28	1-103322-4
7 OBSOLETE	3		1.284	1.200	12	26	1-103322-3
7 OBSOLETE	3		1.184	1.100	11	24	1-103322-2
7 OBSOLETE	3		1.084	1.000	10	22	1-103322-1
7 SUPERSEDED BY 6-146250-0	3		.984	.900	9	20	1-103322-0
7 OBSOLETE	3		.884	.800	8	18	103322-9
7 OBSOLETE	3		.784	.700	7	16	103322-8
	3		.684	.600	6	14	103322-7
	3		.584	.500	5	12	103322-6
	3		.484	.400	4	10	103322-5
	3		.384	.300	3	8	103322-4
	3		.284	.200	2	6	103322-3
	3		.184	.100	1	4	103322-2
7 SUPERSEDED BY 5-146250-1	3		.084	—	—	2	103322-1

THIS DRAWING IS A CONTROLLED DOCUMENT.

DIMENSIONS: INCHES

TOLERANCES UNLESS OTHERWISE SPECIFIED:
0 PLC ± –
1 PLC ± –
2 PLC ± –
3 PLC ± .005
4 PLC ± –
ANGLES ± –

MATERIAL: POST: COPPER ALLOY 6

FINISH: SEE TABLE

DWN J.MARTINELLI 15OCT92
CHK JOHN KNITTLE 23NOV92
APVD B. FLINCHBAUGH 23NOV92

PRODUCT SPEC —
APPLICATION SPEC —
WEIGHT —

TE Connectivity

NAME: ASSEMBLY, HEADER, BREAKAWAY, MOD II, DOUBLE ROW, .100 X .100 C/L, VERTICAL WITH .025 SQUARE POSTS

SIZE A1 | CAGE CODE 00779 | DRAWING NO C-103322 | RESTRICTED TO —

CUSTOMER DRAWING | SCALE 4:1 | SHEET 1 OF 1 | REV L

4805 (3/11)