THIS DRAWING IS UNPUBLISHED. RELEASED FOR PUBLICATION -,- .
© COPYRIGHT - By - ALL RIGHTS RESERVED.

LOC	DIST
BD	0

REVISIONS

P	LTR	DESCRIPTION	DATE	DWN	APVD
	M1	REVISED PER ECO-11-004917	11MAR11	RK	HMR

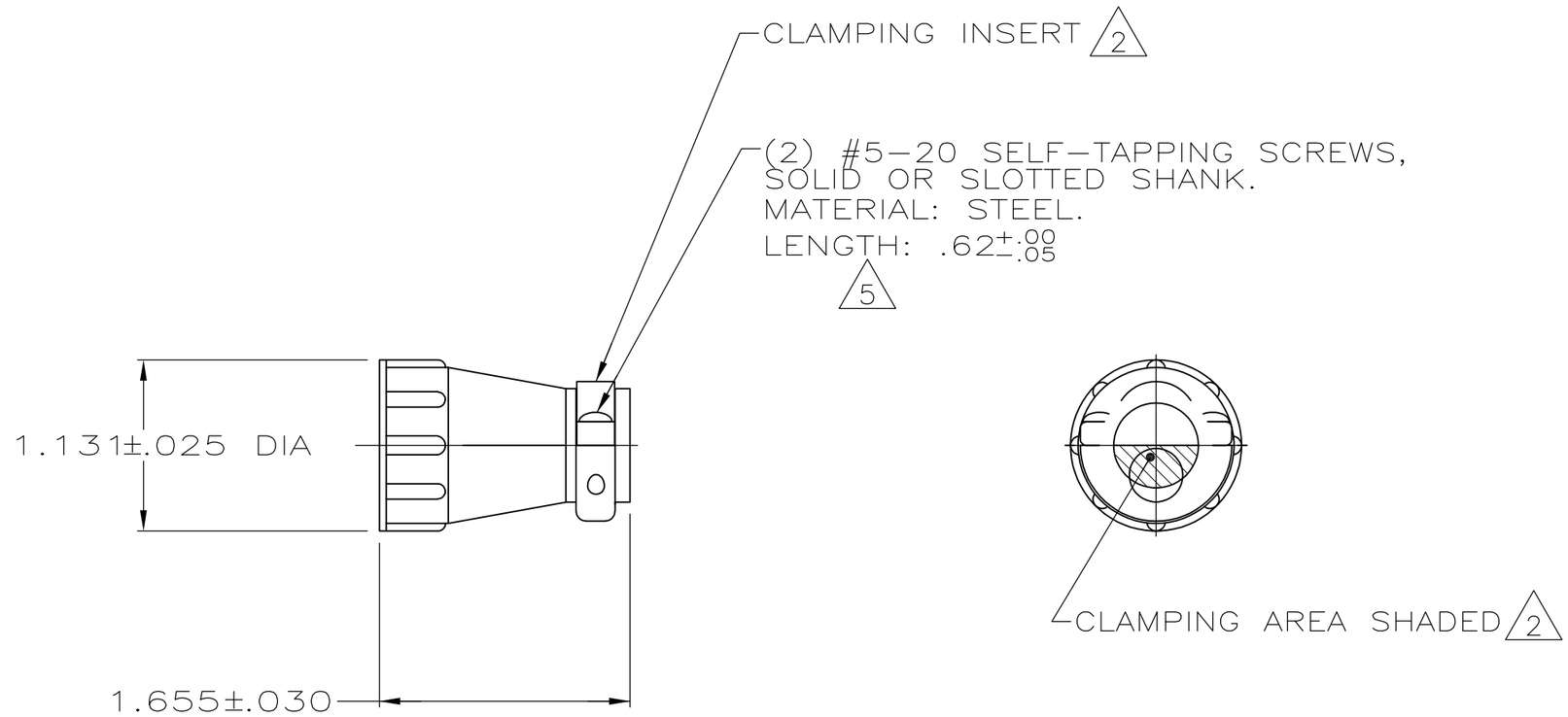

1 PARTS PACKAGED UNASSEMBLED.

2 CABLE CLAMPING AREA ADJUSTABLE FROM .100 TO .410 SQ IN BY REVERSING CLAMPING INSERTS.

3 .703 MAXIMUM CABLE OUTSIDE DIAMETER.

4 BULK PACKAGED KITS TO BE ORDERED IN MULTIPLES OF 100 ONLY.

5 FINISH: ZINC NON-HEXAVALENT CHROMATE.

PACKAGING	PART NUMBER
5 4 BULK	207008-6
5 INDIVIDUAL	207008-5
5 SUPERSEDED BY 207008-6 4 BULK	207008-2
5 SUPERSEDED BY 207008-5 INDIVIDUAL	207008-1

THIS DRAWING IS A CONTROLLED DOCUMENT.

DIMENSIONS: INCHES

TOLERANCES UNLESS OTHERWISE SPECIFIED:
0 PLC ± -
1 PLC ± -
2 PLC ± -
3 PLC ± -
4 PLC ± -
ANGLES ± -

MATERIAL: THERMOPLASTIC

FINISH: -

DWN A GRAFF 4/23/91
CHK W.G.LENKER 7-23-92
APVD -
PRODUCT SPEC 108-10024
APPLICATION SPEC -
WEIGHT -

CUSTOMER DRAWING

TE Connectivity

NAME: CABLE CLAMP KIT, LARGE, SHELL SIZE 13, CPC

SIZE	CAGE CODE	DRAWING NO	RESTRICTED TO
A3	00779	C-207008	-

SCALE 1:1 SHEET 1 OF 1 REV M1