THIS DRAWING IS UNPUBLISHED. RELEASED FOR PUBLICATION NOV ,2004.
© COPYRIGHT 2004 By – ALL RIGHTS RESERVED.

LOC	DIST
J	—

REVISIONS
変更

P	LTR	DESCRIPTION	DATE	DWN	APVD
	G	REVISED PER ECR-11-002357	05MAY11	TT	TM
	H	ECR-13-012512	09AUG2013	IT	WKH

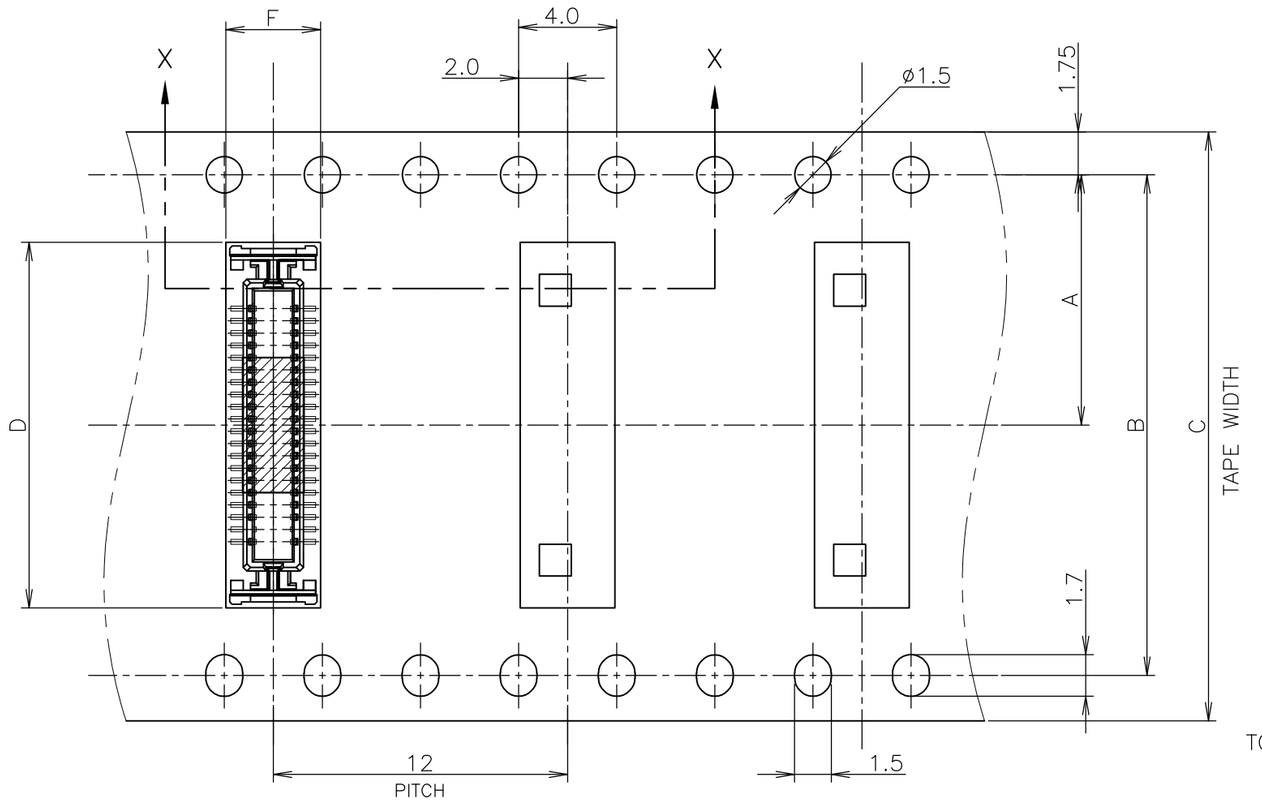

TOP OF REEL

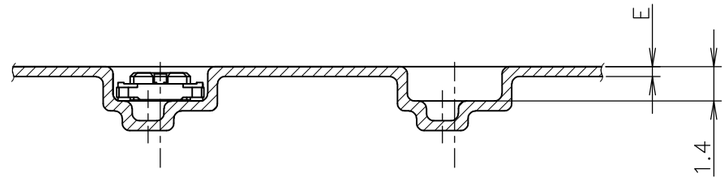

X–X

1 MATING COUNTER PART NUMBER: 5353158
2 MATERIAL
HOUSING: HIGH HEAT-RESISTED
CONTACT: COPPER ALLOY (t=0.15), Au-PLT
SOLDER PEG: COPPER ALLOY (t=0.15), TIN-PLT
3 CONTACT: CONTACT POINT Au-PLT. 0.00076 MIN.
4 HSG: LCP VERSION
5 SUPERSEDED LIST

FROM	TO
7-5353164-0	7-5353164-7
7-5353164-5	7-5353164-6
8-5353164-0	8-5353164-6

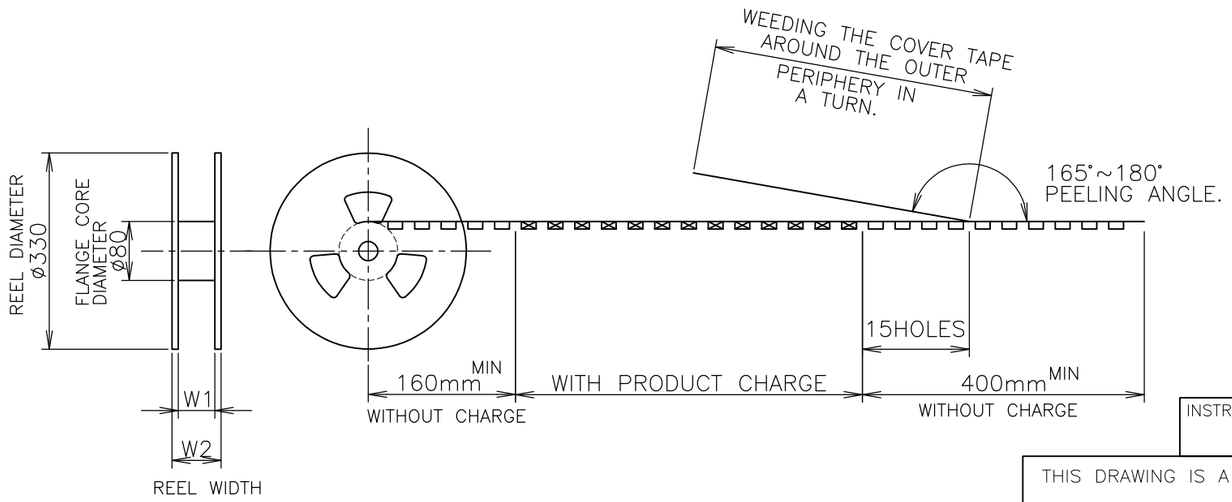

		W2	W1	F	E	D	C	B	A	QTY/REEL	POS	TAPING P/N
		DIMENSIONS										
	4	48.7	45.5	3.86	0.4	24.9	44	40.4	20.2	1500	80	8-5353164-7
	4	48.7	45.5	3.86	0.4	24.9	44	40.4	20.2	1500	80	8-5353164-6
H	OBSOLETE	48.7	45.5	3.86	0.4	24.9	44	40.4	20.2	1500	80	~~8-5353164-5~~
	5	~~48.7~~	~~45.5~~	~~3.86~~	~~0.4~~	~~24.9~~	~~44~~	~~40.4~~	~~20.2~~	~~1500~~	~~80~~	~~8-5353164-0~~
	4	48.7	45.5	3.86	0.4	22.4	44	40.4	20.2	1500	70	7-5353164-7
	4	48.7	45.5	3.86	0.4	22.4	44	40.4	20.2	1500	70	7-5353164-6
	5	~~48.7~~	~~45.5~~	~~3.86~~	~~0.4~~	~~22.4~~	~~44~~	~~40.4~~	~~20.2~~	~~1500~~	~~70~~	~~7-5353164-5~~
	5	~~48.7~~	~~45.5~~	~~3.86~~	~~0.4~~	~~22.4~~	~~44~~	~~40.4~~	~~20.2~~	~~1500~~	~~70~~	~~7-5353164-0~~
	4	37.5	33.5	3.8	0.4	19.85	32	28.4	14.2	1500	60	6-5353164-6
		37.5	33.5	3.8	0.4	19.85	32	28.4	14.2	1500	60	6-5353164-5
H	OBSOLETE	37.5	33.5	3.8	0.4	19.85	32	28.4	14.2	1500	60	~~6-5353164-0~~
G	OBSOLETE	29.5	25.5	3.8	0.4	17.35	24	—//—	11.5	1500	50	5-5353164-5

INSTRUCTION SHEET
411-5781

THIS DRAWING IS A CONTROLLED DOCUMENT.

DIMENSIONS: 単位： 耗 mm

TOLERANCES UNLESS OTHERWISE SPECIFIED: 一般公差

0 PLC	± 0.2
1 PLC	± 0.2
2 PLC	± 0.2
3 PLC	± 0.2
4 PLC	± 0.2
ANGLES	± 3°

MATERIAL 材料
FINISH 仕上

DWN J.ZHU 04NOV2004
CHK S.YAO 04NOV2004
APVD I.ENOMOTO 04NOV2004
PRODUCT SPEC 製品規格 108-60048
APPLICATION SPEC 取付適用規格
WEIGHT

TE Connectivity

NAME 名称
ON TAPING EMBOSS
0.5mm PITCH FS CONN.
TAB ASSEMBLY WITH FILM

SIZE A3 | CAGE CODE 00779 | DRAWING NO 番号 C-5353164 | RESTRICTED TO —

CUSTOMER DRAWING | SCALE 尺度 4:1 | SHEET 1 OF 2 | REV H

THIS DRAWING IS UNPUBLISHED. RELEASED FOR PUBLICATION NOV ,2004.
© COPYRIGHT 2004 By – ALL RIGHTS RESERVED.

LOC	DIST
J	—

REVISIONS 変更

P	LTR	DESCRIPTION	DATE	DWN	APVD
	–	SEE SHEET 1	–	–	–

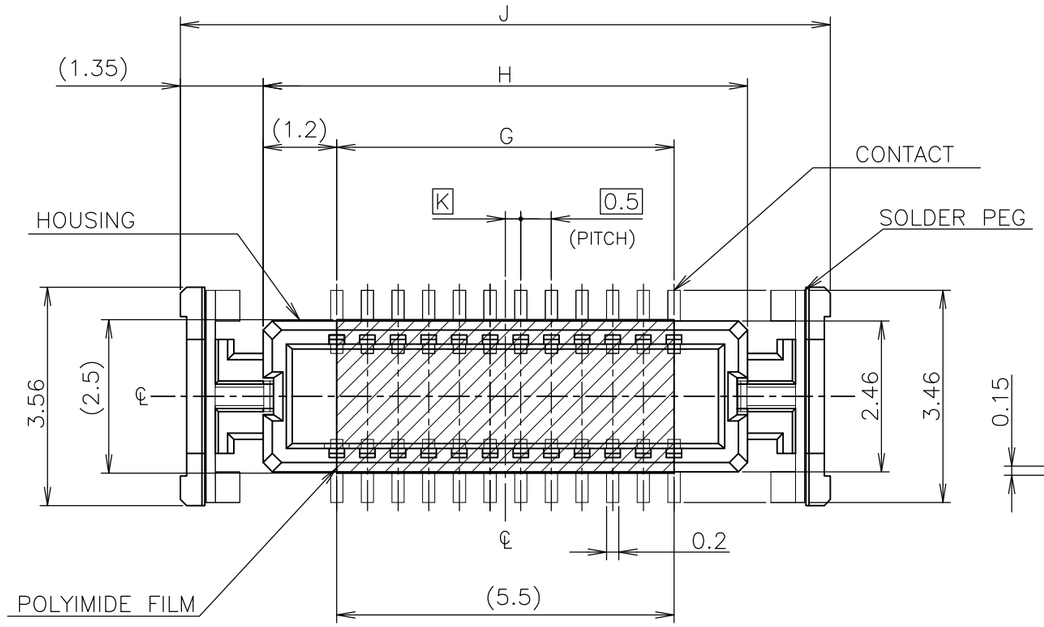

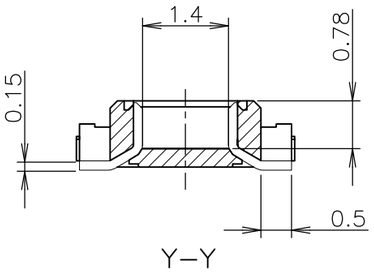

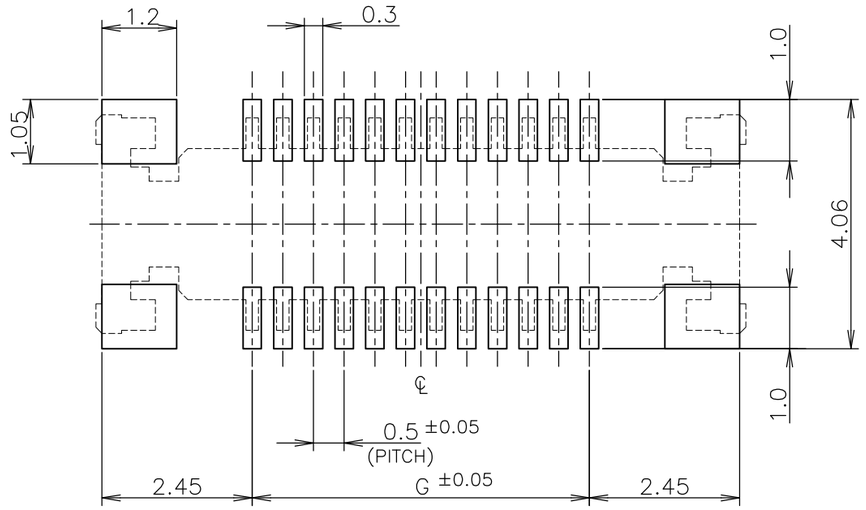

(T=0.6 MIN.)
P.C. BOARD LAYOUT (REF.)

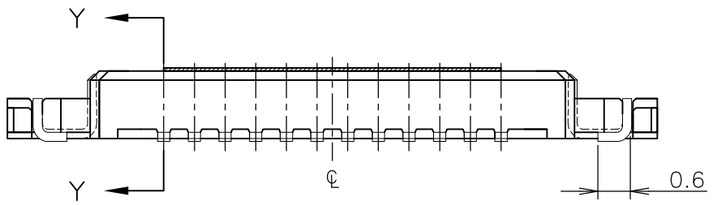

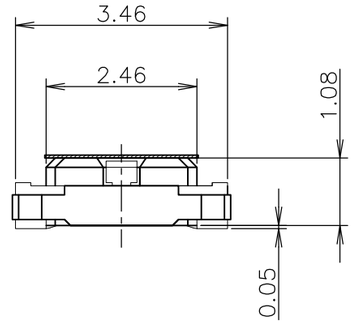

		K	J	H	G	POS.	PART NO.
		DIMENSION					
4	3	0.25	24.6	21.9	19.5	80	8–5353164–7
4	3	0.25	24.6	21.9	19.5	80	8–5353164–6
(H) OBSOLETE	3	0.25	24.6	21.9	19.5	80	~~8–5353164–5~~
	5	~~0.25~~	~~24.6~~	~~21.9~~	~~19.5~~	~~80~~	~~8–5353164–0~~
	4	〃	22.1	19.4	17	70	7–5353164–7
4	3	〃	22.1	19.4	17	70	7–5353164–6
5	~~3~~	~~〃~~	~~22.1~~	~~19.4~~	~~17~~	~~70~~	~~7–5353164–5~~
	5	~~〃~~	~~22.1~~	~~19.4~~	~~17~~	~~70~~	~~7–5353164–0~~
4	3	0.25	19.6	16.9	14.5	60	6–5353164–6
	3	0.25	19.6	16.9	14.5	60	6–5353164–5
(H) OBSOLETE		0.25	19.6	16.9	14.5	60	~~6–5353164–0~~
(G) OBSOLETE		〃	17.1	14.4	12.0	50	5–5353164–5

THIS DRAWING IS A CONTROLLED DOCUMENT.

DIMENSIONS: 単位： 粍 mm

TOLERANCES UNLESS OTHERWISE SPECIFIED: 一般公差

0 PLC	± 0.2
1 PLC	± 0.2
2 PLC	± 0.2
3 PLC	± 0.2
4 PLC	± 0.2
ANGLES	± 3°

MATERIAL 材料 2

FINISH 仕上 2

INSTRUCTION SHEET 411–5781

DWN
CHK
APVD
PRODUCT SPEC 製品規格
APPLICATION SPEC 取付適用規格
WEIGHT

TE Connectivity

NAME 名称: ON TAPING EMBOSS 0.5mm PITCH FS CONN. TAB ASSEMBLY WITH FILM

SIZE	CAGE CODE	DRAWING NO 番号	RESTRICTED TO
A3	00779	C–5353164	—

CUSTOMER DRAWING | SCALE 尺度 10:1 | SHEET 2 OF 2 | REV H