THIS DRAWING IS UNPUBLISHED. RELEASED FOR PUBLICATION
© COPYRIGHT BY TYCO ELECTRONICS CORPORATION. ALL RIGHTS RESERVED.

LOC	DIST
DS	–

REVISIONS

P	LTR	DESCRIPTION	DATE	DWN	APVD
	0	RELEASED(FC00-0057-04)	16.APR'04	BH	CS
	A	REVISED(ECR-08-000105)	10JAN.'08	BH	JK

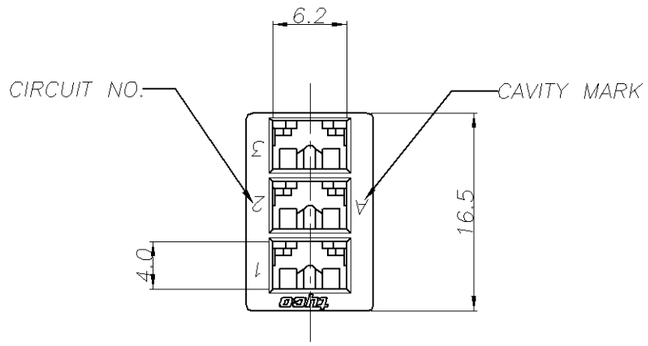

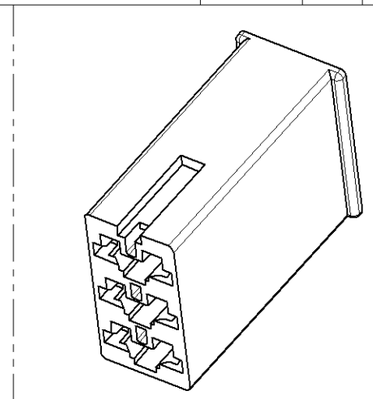

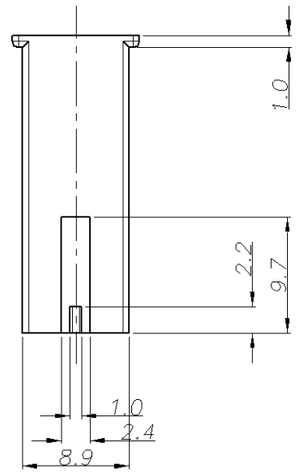

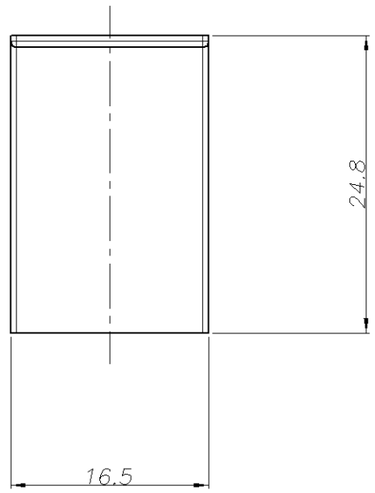

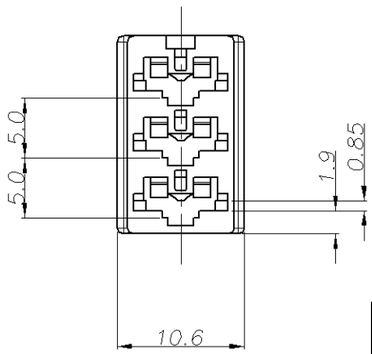

NOTES

1. GENERAL TOLERANCE ; ±0.3,±3°
2. CAVITY MARK SHALL BE LOCATED APPROX. AS SHOWN.
3. APPLICABLE CONTACT P/N : 170324~170326

	P/N	MATERIAL	COLOR
Ⓐ	1-1743068-1	6/6 NYLON, V-0	NATURAL
	1743068-1	6/6 NYLON, V-2	NATURAL

THIS DRAWING IS A CONTROLLED DOCUMENT FOR TYCO ELECTRONICS CORPORATION IT IS SUBJECT TO CHANGE AND THE CONTROLLING ENGINEERING ORGANIZATION SHOULD BE CONTACTED FOR THE LATEST REVISION.

DIMENSIONS: MM

TOLERANCES UNLESS OTHERWISE SPECIFIED:
0 PLC ±
1 PLC ±
2 PLC ±
3 PLC ±
4 PLC ±
ANGLES ±

MATERIAL: SEE TABLE
FINISH: – –

DWN: BH CHO
CHK: BW KANG
APVD: JK SONG
PRODUCT SPEC: Ⓐ 108-61062
APPLICATION SPEC: –
WEIGHT: –

CUSTOMER DRAWING

Tyco Electronics
AMP KOREA.
kyungsan, korea

NAME: 187 P/LOCK 3P HSG for Dryer

SIZE	CAGE CODE	DRAWING NO	RESTRICTED TO
A3	00779	C- 1743068	–

SCALE 2/1 | SHEET 1 OF 1 | REV A

AMP 1470-19 REV 31MAR2000