CASE FINISH	CURRENT (AMPS)	WORKING VOLTAGE				MAXIMUM DC RESISTANCE (OHMS)	MAXIMUM VOLTAGE DROP		MINIMUM CAPACITANCE (uF)	MIN. INSERTION LOSS PER MIL-STD-220, FULL LOAD, +25°C												
		-55°C TO +85°C		-55°C TO +125°C																		
		AC	DC	AC	DC		DC	AC		14 KHz	30 KHz	50 KHz	75 KHz	100 KHz	150 KHz	300 KHz	500 KHz	1 MHz	10 MHz	100 MHz	1 GHz	10 GHz
SOLDER	5	---	200	---	150	0.015	0.075	---	0.33	--	--	--	--	8	12	20	--	32	60	60	70	--

PART MARKING:

J M28861/03-034TB
OLSP2 DATE CODE

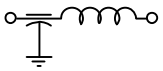

PACKAGE MARKING:

J M28861/03-034TB
OLSP2 DATE CODE
150VDC 5A 51-390-066
QTY.

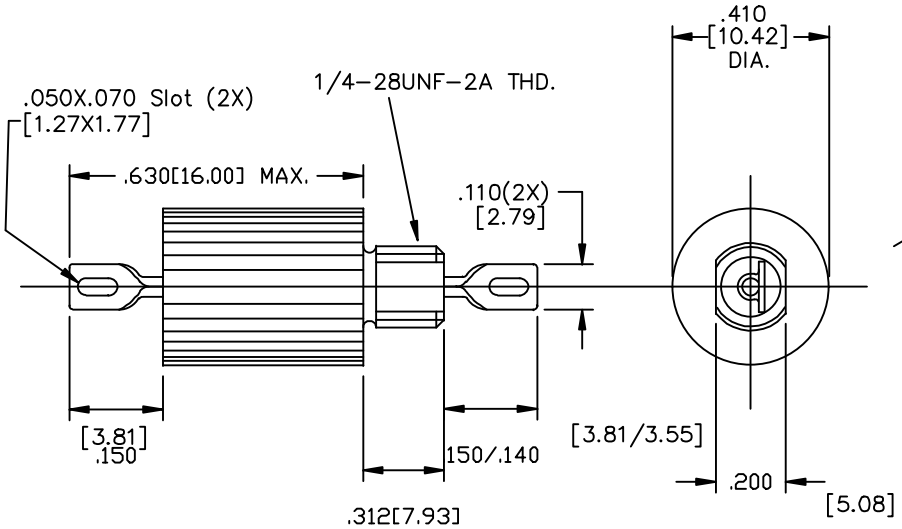

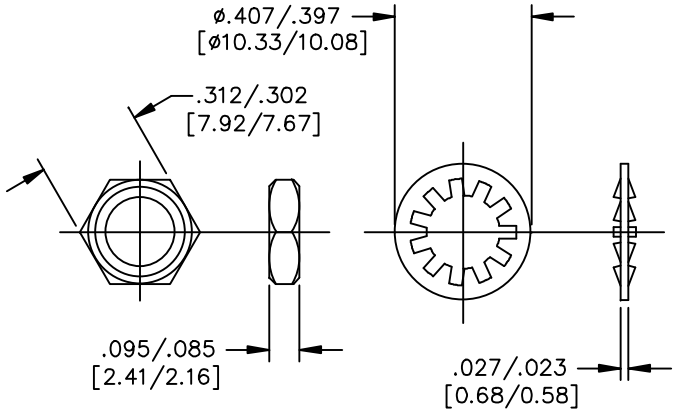

MTG. HARDWARE

MARKING NOTES:

N/A

SCHEMATIC

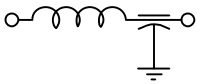

NOTES:

1) MOUNTING TORQUE NOT TO EXCEED 7in-lbs.
2) THIS PART CODED "NCA". SCI DOES NOT HAVE CHANGE AUTHORITY. CUSTOMER APPROVAL REQUIRED BEFORE PRODUCT/PROCESS CHANGES CAN BE MADE.

02

REV. NO.	CHANGE NOTICE
02	CN. 57814-ENG
01	CN. 176748
00	CN. 171313

UNLESS OTHERWISE SPECIFIED DIMENSIONS ARE IN INCHES. [MILLIMETERS]

DO NOT SCALE.

TOLERANCES UNLESS OTHERWISE SPECIFIED
Fractions ±
Dec. .xx±
Dec. .xxx± .010
Angles ±0° 30'

CODE IDENT. NO. OLSP2

SPECTRUM CONTROL INC.

ERIE, FAIRVIEW PENNSYLVANIA

Dwn. KAUFFMAN
Ckd. 2-28-96
Apvd.
Sheet 1 of 1

Description Low Pass EMI Filter

51-390-066

Quality Products From The Specialists In Electro-Magnetic Compatibility

Mouser Electronics

Authorized Distributor

Click to View Pricing, Inventory, Delivery & Lifecycle Information:

API Technologies:

51-390-066