THIS DRAWING IS UNPUBLISHED. RELEASED FOR PUBLICATION 20
© COPYRIGHT 20 BY TYCO ELECTRONICS CORPORATION. ALL RIGHTS RESERVED.

LOC	DIST
HM	00

REVISIONS

P	LTR	DESCRIPTION	DATE	DWN	APVD
	O	RLSD; NSD01-054	09OCT2001	TLP	GB
	A	ECO-06-023865	06NOV2006	JM	GB
	B	REV; ECO-10-010362	18MAY2010	GG	RA

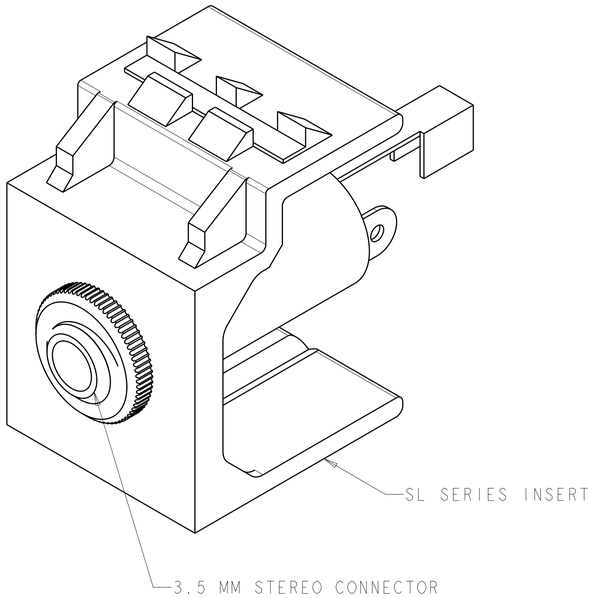

⚠ MATERIAL:
INSERT- POLYCARBONATE MOLDING COMPOUND
CONNECTOR BODY- BRASS, NICKEL PLATED

2. ALL DIMENSIONS NOMINAL UNLESS OTHERWISE SPECIFIED.

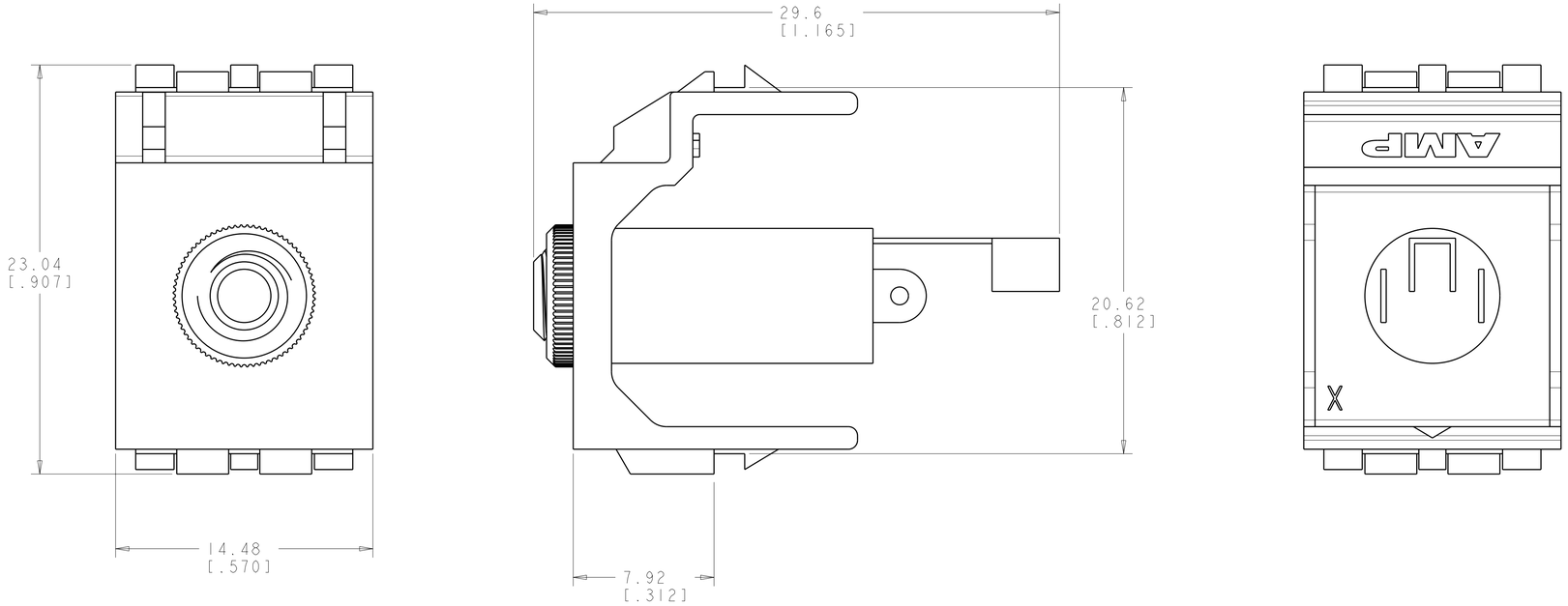

ALPINE WHITE	1-1479086-3
ELECTRIC IVORY	1-1479086-1
NEMA GRAY	1479086-4
WHITE	1479086-3
BLACK	1479086-2
LIGHT ALMOND	1479086-1
COLOR	PART NUMBER

THIS DRAWING IS A CONTROLLED DOCUMENT FOR TYCO ELECTRONICS CORPORATION. IT IS SUBJECT TO CHANGE AND THE CONTROLLING ENGINEERING ORGANIZATION SHOULD BE CONTACTED FOR THE LATEST REVISION.

DIMENSIONS: MM [INCHES]

TOLERANCES UNLESS OTHERWISE SPECIFIED:
0 PLC ±-
1 PLC ±-
2 PLC ±-
3 PLC ±-
4 PLC ±-
ANGLES ±-

MATERIAL -
FINISH -

DWN T PITTS 31AUG2001
CHK L SMITH 09OCT2001
APVD G BOWMAN 09OCT2001

Tyco Electronics
Tyco Electronics
Harrisburg, PA 17105-3608

NAME INSERT ASSY,3.5MM CONN,SL SERIES

PRODUCT SPEC -
APPLICATION SPEC -
WEIGHT -

SIZE A | CAGE CODE 00779 | DRAWING NO C-1479086 | REPLACES | REPLACED BY

CUSTOMER DRAWING | SCALE 6:1 | SHEET 1 OF 1 | REV B

SUPERSEDED
NOT the LATEST REVISION