THIS DRAWING IS UNPUBLISHED. RELEASED FOR PUBLICATION ,20 .
© COPYRIGHT 19 BY AMP INCORPORATED. ALL RIGHTS RESERVED.

LOC	DIST
DS	—

REVISIONS

P	LTR	DESCRIPTION	DATE	DWN	APVD
	0	RELEASED (FC00-0016-03)	04/FEB/'03	YD	CS
	A	REVISED (ECR-10-014221)	22/DEC/'10	SJ	HG

BEFORE ASS'Y

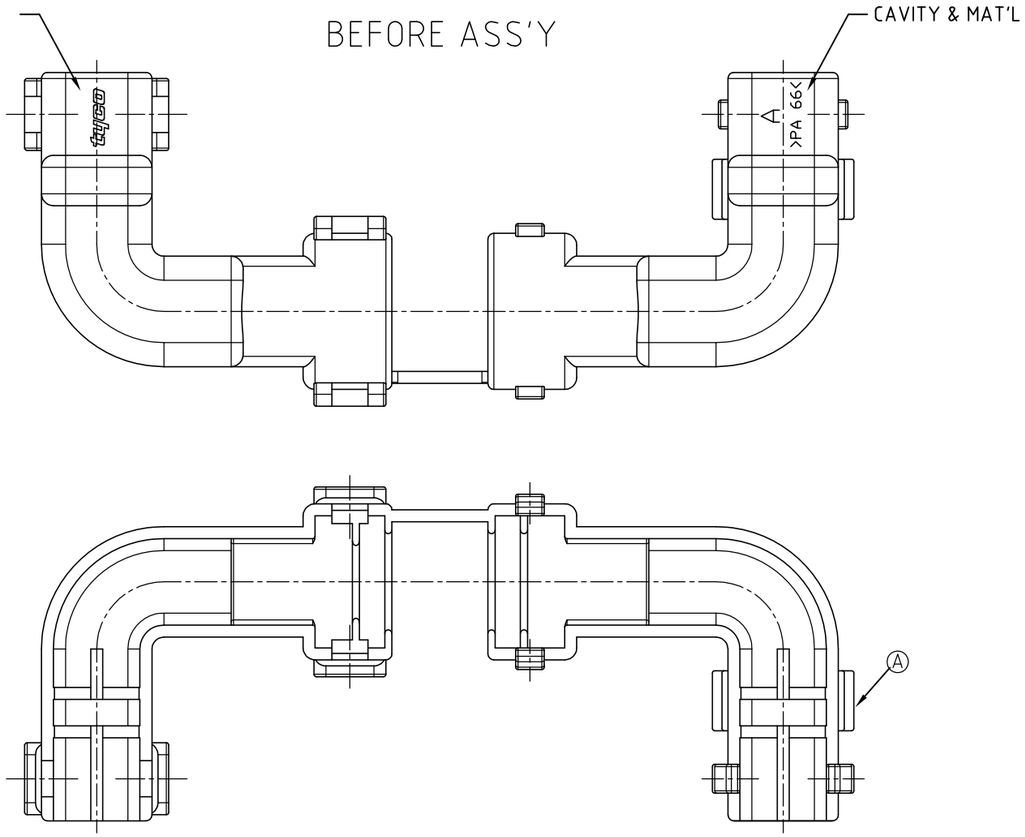

AFTER ASS'Y

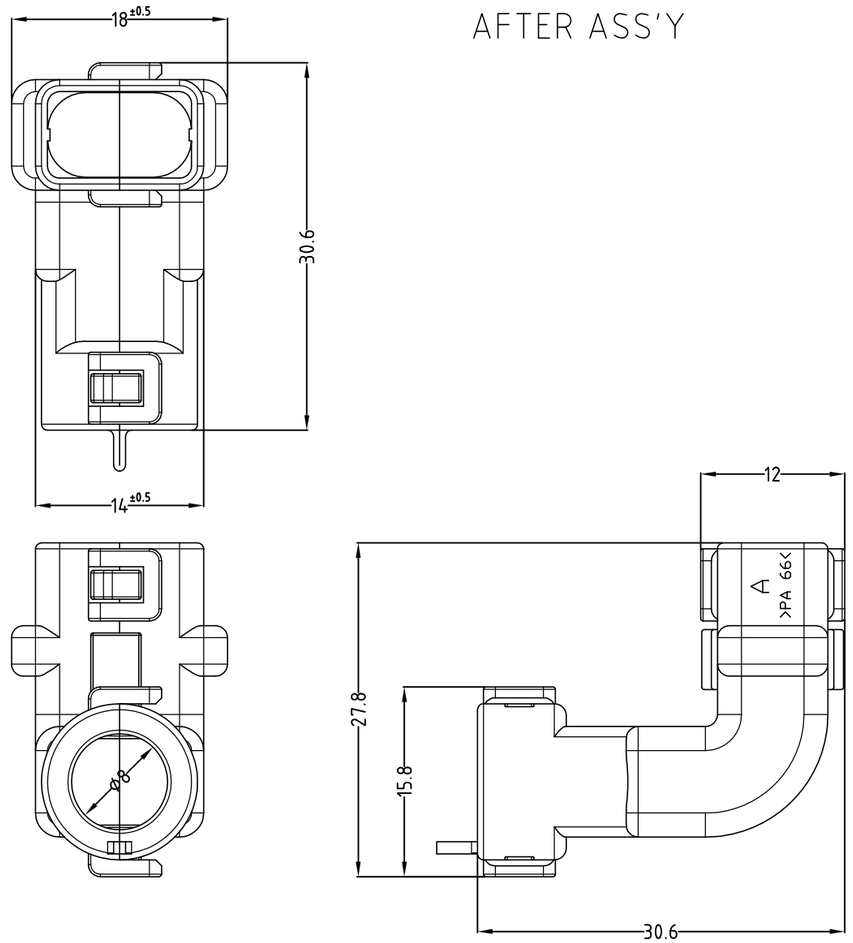

3D VIEW

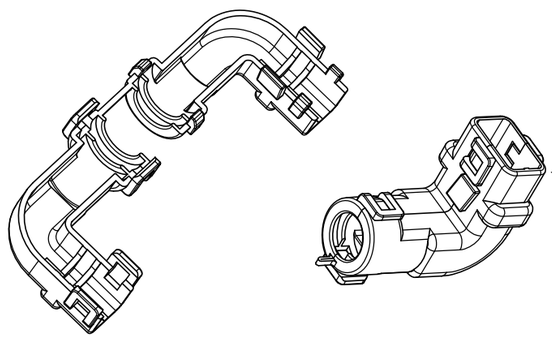

NOTE

1. APPLICABLE CORRUGATOR DIAMETER : Ø7.0
2. APPLICABLE JPT 2P ASS'Y P.NO : 368354

PA 66	936458-2	BLACK
MATERIAL	PART NUMBER	COLOR

DIMENSIONS: MM

3rd ANGLE PROJECTION

TOLERANCES UNLESS OTHERWISE SPECIFIED:

0 <XX<10	± 0.2
10<XX<30	± 0.25
30<XX	± 0.3
ANGLES	± 3°

MATERIAL

FINISH

DWN : SJ CHOI

CHK : JW JUNG

APVD : HG CHO

PRODUCT SPEC

APPLICATION SPEC

WEIGHT 2.3 g

Tyco Electronics — Tyco Electronics kyungsan, korea

NAME: COVER HSG FOR JPT 2P ASS'Y

SIZE	CAGE CODE	DRAWING NO
A3	00779	C- 936458

SCALE 2/1 | SHEET 1 OF 1 | REV A

AMP 1470-19 REV 09MAY94
THIS DRAWING IS A CONTROLLED DOCUMENT FOR AMP INCORPORATED. IT IS SUBJECT TO CHANGE AND THE CONTROLLING ENGINEERING ORGANIZATION SHOULD BE CONTACTED FOR THE LATEST REVISION.