THIS DRAWING IS UNPUBLISHED. RELEASED FOR PUBLICATION -.- .
© COPYRIGHT - BY TYCO ELECTRONICS CORPORATION. ALL RIGHTS RESERVED.

LOC	DIST
GP	00

REVISIONS

P	LTR	DESCRIPTION	DATE	DWN	APVD
	G	REVISED PER ECO-09-013073	11JUN2009	ZMR	SLB
	G1	REVISED PER ECO-09-023313	13OCT09	KK	AEG

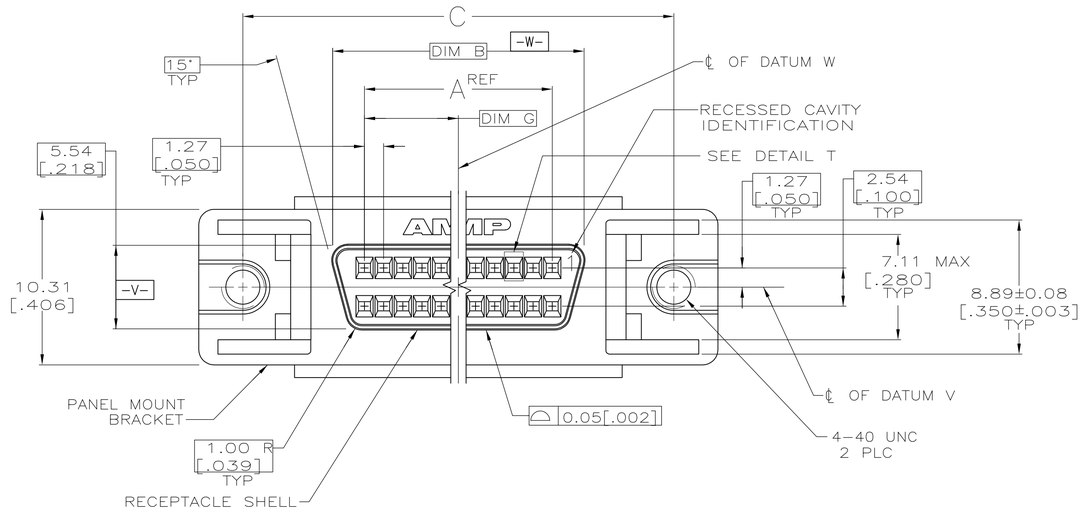

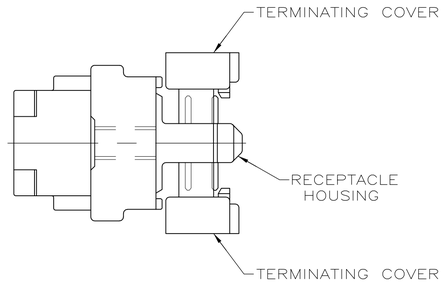

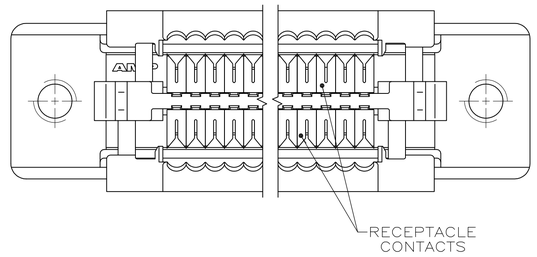

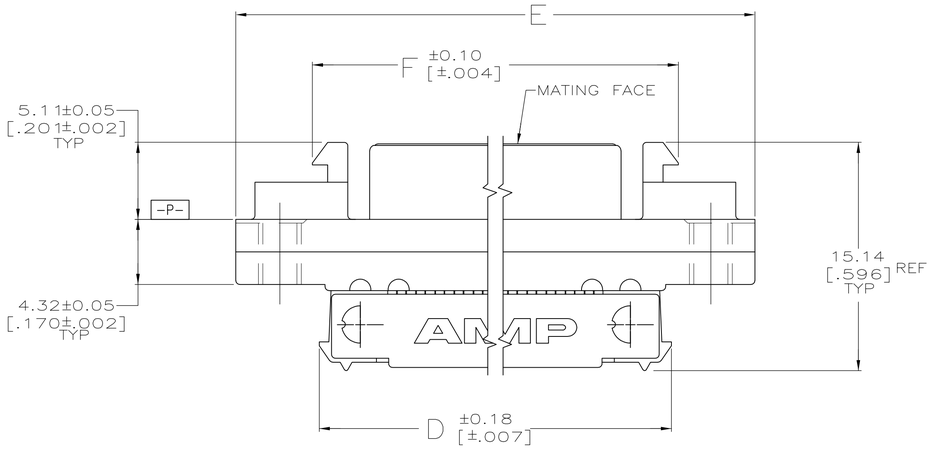

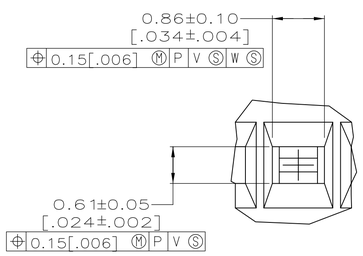

DETAIL T
SCALE 20:1
TYPICAL

1. MATERIAL-
RECEPTACLE CONTACTS: PHOSPHOR BRONZE.
RECEPTACLE SHELL: STEEL.
PANEL MOUNT BRACKET: ZINC.
RECEPTACLE HOUSING AND TERMINATION COVERS: UL V-0 RATED THERMOPLASTIC, COLOR: BLACK.

2. FINISH-
RECEPTACLE CONTACTS: EITHER 0.76μm [.000030] MIN GOLD PLATE OR GOLD FLASH OVER PALLADIUM NICKEL PLATE, 0.76μm [.000030] MIN TOTAL IN CONTACT AREA, 1.27μm [.000050] MIN TIN-LEAD IN TERMINATION AREA, ALL OVER 1.27μm [.000050] MIN NICKEL.
RECEPTACLE SHELL: 5.08μm [.000200] MIN NICKEL OVER 1.27μm [.000050] MIN COPPER.
PANEL MOUNT BRACKET: 5.08μm [.000200] MIN NICKEL OVER 7.62μm [.000300] MIN COPPER.

3. RECOMMENDED WIRE:
28 AWG OR 30 AWG, SOLID OR 7 STRANDED, WITH A 0.74-0.91 [.029-.036] INSULATION DIA, OR AMP .050 CENTERLINE 28 AWG, STRANDED, PVC, FLAT GRAY RIBBON CABLE, WIRE MUST BE APPROVED BY AMP INCORPORATED.

4. FINISH-
RECEPTACLE CONTACTS: EITHER 0.76μm [.000030] MIN GOLD PLATE OR GOLD FLASH OVER PALLADIUM NICKEL PLATE, 0.76μm [.000030] MIN TOTAL IN CONTACT AREA, 1.27μm [.000050] MIN TIN IN TERMINATION AREA, ALL OVER 1.27μm [.000050] MIN NICKEL.
RECEPTACLE SHELL: 5.08μm [.000200] MIN NICKEL OVER 1.27μm [.000050] MIN COPPER.
PANEL MOUNT BRACKET: 5.08μm [.000200] MIN NICKEL OVER 7.62μm [.000300] MIN COPPER.

5. ROHS 2002/95/EC COMPLIANT

6. OBSOLETE PARTS: OBSOLETE CIS STREAMLINING PER D.RENAUD/D.SINISI

5	4	15.24 [.600]	42.29 [1.665]	52.45 [2.065]	41.38 [1.629]	46.48 [1.830]	34.70 [1.366]	30.48 [1.200]	50	5-750450-1
6 SUPERDEDED	2	15.24 [.600]	42.29 [1.665]	52.45 [2.065]	41.38 [1.629]	46.48 [1.830]	34.70 [1.366]	30.48 [1.200]	50	750450-1
	FINISH	G	F	E	D	C	B	A	NO OF POSN	

THIS DRAWING IS A CONTROLLED DOCUMENT.

DIMENSIONS: MM [INCHES]

TOLERANCES UNLESS OTHERWISE SPECIFIED:
0 PLC ± -
1 PLC ± -
2 PLC ± 0.13 [.005]
3 PLC ± -
4 PLC ± -
ANGLES ± -

MATERIAL 1
FINISH SEE TABLE

DWN JOHN ROOT 8-27-90
CHK MIKE SHIRK 8-27-90
APVD -
PRODUCT SPEC -
APPLICATION SPEC -
WEIGHT -

Tyco Electronics
Tyco Electronics Corporation
Harrisburg, Pa 17105-3608

NAME RECEPTACLE CABLE ASSEMBLY W/#4-40 MOUNTING HOLES, PANEL MOUNT, -

SIZE	CAGE CODE	DRAWING NO	RESTRICTED TO
A1	00779	C-750450	-

CUSTOMER DRAWING
SCALE 5:1 SHEET 1 OF 1 REV G1