PART NUMBER	ITEM ① BODY	ITEM ① COLOR	ITEM ② CONTACT	ITEM ③ MOUNTING NUT
105-0251-001	NYLON	WHITE	PHOSPHOR BRONZE SILVER PL .0001 MIN	BRASS NICKEL PL .0001 MIN
105-0252-001		RED		
105-0253-001		BLACK		
105-0254-001		GREEN		
105-0255-001				
105-0256-001		ORANGE		
105-0257-001		YELLOW		
105-0258-001		BROWN		
105-0259-001				
105-0260-001		BLUE		
105-0261-001				
105-0262-001		VIOLET		
105-0263-001		GRAY		
105-0264-001				
105-0265-001				
105-0266-001				
105-0267-001				
105-0268-001				
105-0269-001				
105-0270-001				

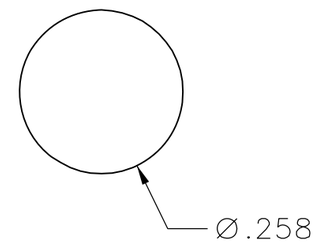

RECOMMENDED MOUNTING HOLE

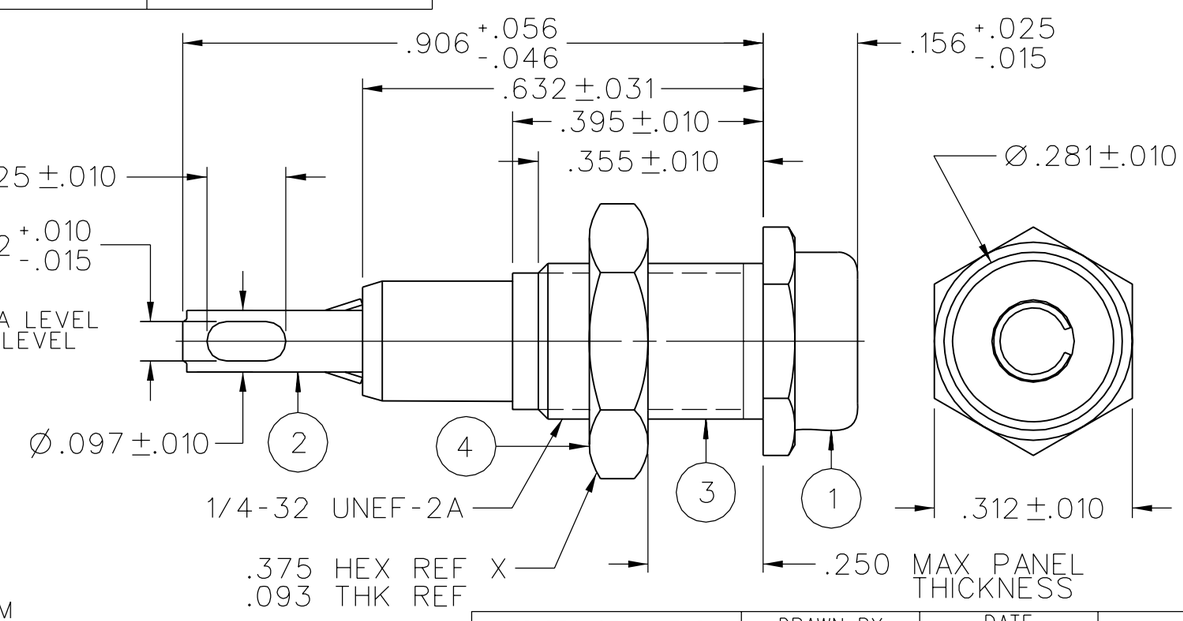

NOTES:

SPECIFICATIONS:

ELECTRICAL:

CURRENT RATING: 10 AMPS DC MINIMUM
DIELECTRIC WITHSTANDING VOLTAGE: 5700 VRMS MINIMUM AT SEA LEVEL
RECOMMENDED WORKING VOLTAGE: 1500 VRMS MAXIMUM AT SEA LEVEL
INSULATION RESISTANCE: 5000 MEGOHMS MINIMUM
CONTACT RESISTANCE: 10 MILLIOHMS MAXIMUM
CAPACITANCE: 2 PF NOMINAL

MECHANICAL:

INSERTION/WITHDRAWAL FORCE: .5 - 5.0 POUNDS
CONTACT RETENTION IN INSULATOR FORCE: 10 POUNDS MINIMUM
CONTACT RETENTION IN INSULATOR TORQUE: 12 IN OZ MINIMUM
INSULATOR RETENTION IN .062 PANEL FORCE: NOT APPLICABLE
INSULATOR RETENTION IN SLEEVE FORCE: NOT APPLICABLE
INSULATOR RETENTION IN .062 PANEL TORQUE: NOT APPLICABLE
PLASTIC MOUNTING THREAD STRIPPING TORQUE: 4 IN LBS MINIMUM
RESISTANCE TO TEST PROBE DAMAGE TORQUE: 2 IN LBS MINIMUM
MATING TIP PLUG DIAMETER: .080
DURABILITY: 1000 CYCLES MINIMUM

ENVIRONMENTAL:

(MEETS OR EXCEEDS THE APPLICABLE PARAGRAPH OF MIL-PRF-39024)
OPERATING TEMPERATURE: -55 DEG C TO 85 DEG C
TEMPERATURE RISE AT RATED CURRENT: 10 DEG C MAXIMUM
CORROSION: MIL-STD-1344, METHOD 1001, CONDITION B
SHOCK: MIL-STD-1344, METHOD 2004, CONDITION G
VIBRATION: MIL-STD-1344, METHOD 2005, CONDITION I
HUMIDITY: MIL-STD-1344, METHOD 1002, CONDITION B

DRAWING NO.
B - 105-0251/0270-001

0	REVISIONS

REVISED AND REDRAWN. DRAWING WAS "C" SIZE 105-0251/0268-001/201 DATED 7-15-87. SPLIT INTO 2 SEPERATE DWGS. CREATED SHEET 2.

* REVISION NUMBER FOLLOWED BY AN ALPHA CHARACTER INDICATES DRAWING CLARIFICATION OR PART NUMBER ADDITION ONLY. *

17c	1-7-03	RH	RJB				10-16-03 ECN 48697

CUSTOMER DRAWING

THIS DRAWING TO BE INTERPRETED PER ASME Y 14.5M - 1994

"μSTATION"

COMPANY CONFIDENTIAL

TOLERANCE UNLESS OTHERWISE SPECIFIED		DRAWN BY RJB	DATE 12-16-02
DECIMALS .XX	mm	CHECKED BY	DATE
.XXX REF		APPROVED BY RJB	DATE 10-16-03
MATL		RELEASE DATE	10-16-03
FINISH		U/M INCH	SCALE 4:1

cinch CONNECTIVITY SOLUTIONS a bel group
Cinch Connectivity Solutions
P.O. Box 1732
Waseca, MN 56093
1-800-247-8256

TITLE
ASSEMBLY, .080 (2.0mm) TIP JACK, INSULATED METAL CLAD PANEL MOUNT, SOLDER TERMINAL

SHEET 2 OF 2

DRAWING NO.
B - 105-0251/0270-001