PRODUCT NUMBER

57202–XXX–XXXXXLF

- PLATING
  - S = 0.38µm GOLD/GXT ON CONTACT AREA 2µm MIN MATTE TIN ON TAIL
  - G = 0.76µm GOLD/GXT ON CONTACT AREA 2µm MIN MATTE TIN ON TAIL
  - F = GOLD FLASH ON CONTACT AREA 2µm MIN MATTE TIN ON TAIL
  - T = 2–6.0µm FULL MATTE TIN
  - 1.27µm MIN NICKEL UNDERPLATING
- STYLE
- NB OF POS PER ROW : 02 TO 25
- PACKAGING, SEE NOTE 5
- POLARIZATION, SEE NOTE 6
- RoHS COMPATIBLE SEE NOTE 7

STYLE	POST LENGTH ±0.2
51	2.00
52	4.00
53	3.50
54	2.50

TOP VIEW

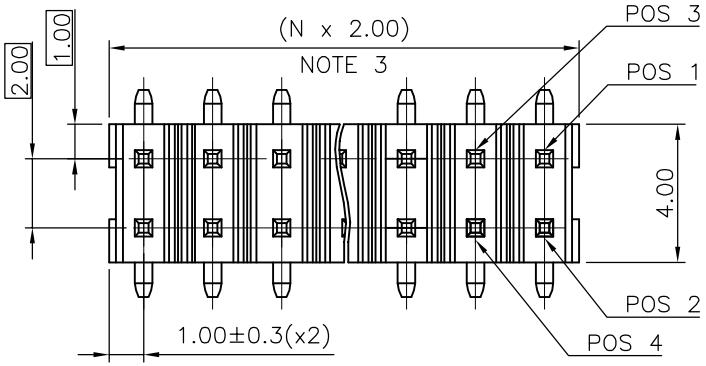

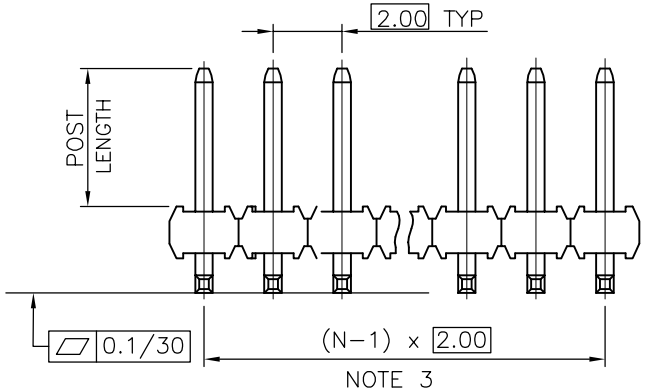

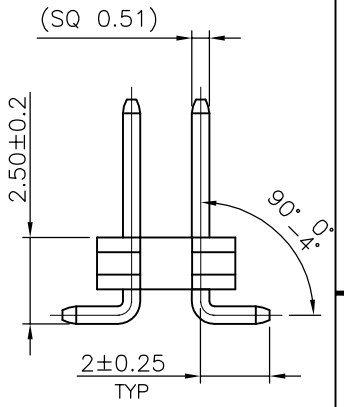

NOTES:

1. MATERIAL HOUSING: HIGH TEMP. THERMOPLASTIC UL 94V–0, COLOR BLACK
2. MATERIAL TERMINAL: COPPER ALLOY
3. TO DETERMINE DIMENSIONS: N = NUMBER OF POSITIONS PER ROW.
4. 7N MIN. PIN RETENTION IN EITHER DIRECTION.
5. PACKAGING:
   - = STANDARD PACKAGING IN POLYBAGS
   - – = POLYBAGS PACKAGING WHEN POLARISATION FEATURE APPLICABLE.
   - U = TUBE AVAILABLE FROM 04 TO 25 POS PER ROW.
   - A = TAPE AND REEL WITH PICK UP CAP INSTALLED IN THE CENTER OF THE PRODUCT FOR PICK AND PLACE SEE TA 884 FOR PRODUCT AVAILABILITY.
   - K = TAPE AND REEL WITHOUT CAP, SEE TA884 FOR AVAILABILITY.
6. FOR POLARIZATION, SPECIFY POSITION NUMBER TO OMIT PIN. EXAMPLE : 03 = OMIT PIN POSITION 3, SEE TOP VIEW. OMIT FROM PRODUCT NUMBER IF THIS FEATURE IS NOT APPLICABLE.
7. RoHS COMPATIBLE PRODUCT SPECIFICATIONS
   - a – PLATING:
     - "LF" MEANS THE PRODUCT IS LEAD–FREE, 2µm MINIMUM MATTE TIN OVER 1.27µm MINIMUM NICKEL UNDERPLATE.
   - b – MANUFACTURING PROCESS COMPATIBILITY
     - THE HOUSING WILL WITHSTAND EXPOSURE TO 260°C PEAK TEMPERATURE FOR 30 SECONDES IN A CONVECTION, INFRA–RED OR VAPOR PHASE REFLOW OVEN.
   - c – LABELLING:
     - MEETS PACKAGING SPECS AS PER GS–14–920
   - d – LEGAL STATEMENT : SEE GS–47–0004

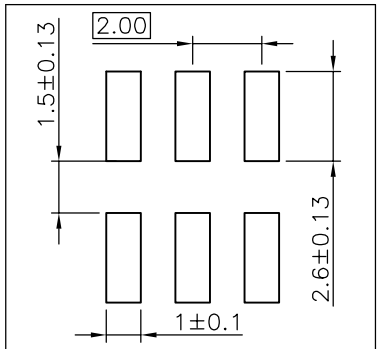

RECOMMENDED PAD LAYOUT

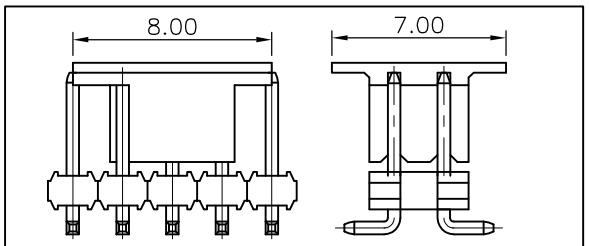

CAP DIMS FOR 2x3 POS UP TO 2x25 POS

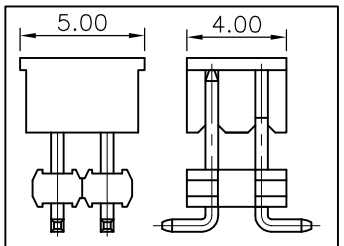

CAP DIMS FOR 2x2 POS

mat'l. code				surface ISO 1302	tolerance ISO 406 ISO 1101	projection
ltr	ecn no	dr	date	tolerances unless otherwise specified		
L	F09–0087	JCO	09.09.04	angles	linear .X ±0.3	mm
M	F11–0026	LMU	11.05.12		.XX ±0.13	
N	B–19190	LMU	14.10.24		.XXX ±0.05	scale 1:1
P	B–19797	AMA	14.12.16	dr L.MULIN	04.05.06	
R	B–19988	LMU	15.01.13	engr J.COMPAGNON	0.4.11.25	
S	B–20032	AMA	15.01.20	chr		
				appd JM.C	04.11.25	

product family: MINITEK

title: UNSH HEADER 2.00 mm VERTICAL SMT

dwg no: 57202 | sheet 1 of 1 | size A3

type: CUSTOMER Drawing

sheet index | revision sheet

form: A3

FCIconnect.com
Copyright FCI