THIS DRAWING IS UNPUBLISHED. RELEASED FOR PUBLICATION -,- .
© COPYRIGHT - By - ALL RIGHTS RESERVED.

LOC	DIST
CM	54

REVISIONS

P	LTR	DESCRIPTION	DATE	DWN	APVD
	M2	REVISED PER ECO-11-014117	23SEP14	MGM	CO

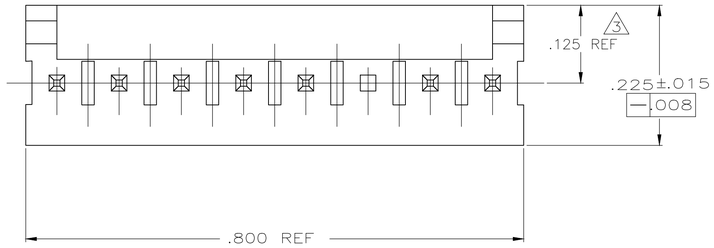

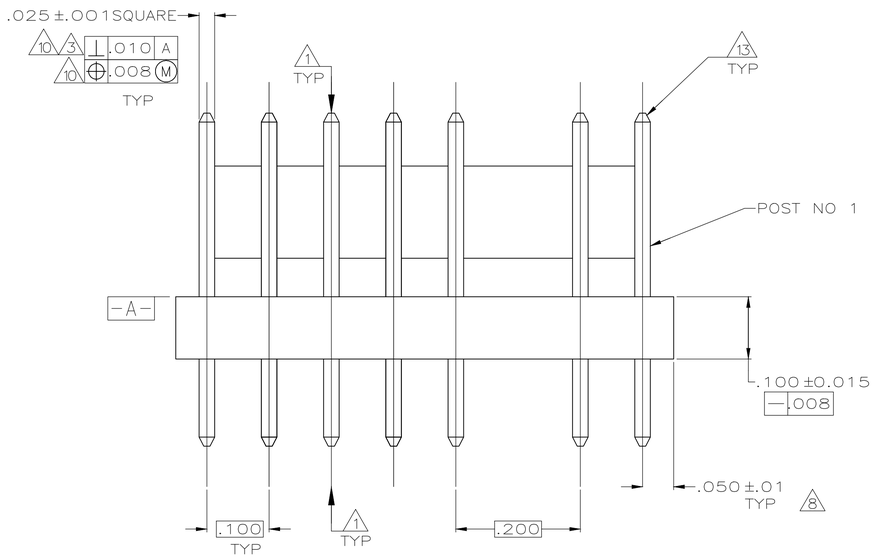

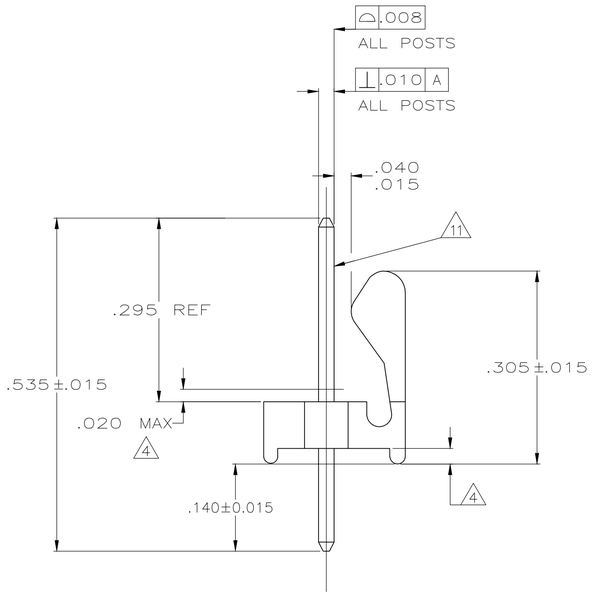

1. POST TO WITHSTAND 13 NEWTONS (3 LBS) MIN. AXIAL FORCE IN BOTH DIRECTIONS SHOWN WITHOUT DISLODGING.
2. TOLERANCES APPLY TO SOLDER SIDE OF BOARD.
3. MEASURED AT SURFACE -A-
4. PLASTIC FLASH PERMITTED IN THIS AREA.
5. PARTS COMPLY WITH AMP SOLDERABILITY SPEC. NO. 109-11-2.
6. ONE HOLE MAY BE UNDERSIZED(.032-.035 DIA) FOR ASSEMBLY RETENTION DURING WAVE SOLDERING.
7. MATERIAL: HEADER-THERMOPLASTIC POLYESTER UL94V-0(NATURAL)
   POST-COPPER ALLOY (TIN-PLATED)
8. COORDINATE DIMENSION APPLIES FROM CENTER OF ACTUAL FEATURE.
9. PLASTIC BURRS CAUSED BY CUT-OFF TOOLING ARE PERMITTED WITHIN THE MAXIMUM TOLERANCE ENVELOPE.
10. POSTS TO BE MEASURED WHEN STRIP IS HELD FLAT.
11. POSTS MUSTS WITHSTAND TWO 90° BENDS AGAINST EXTRUSION WITHOUT BREAKING.
12. DIMENSION SHOULD BE .130 MIN WHEN MATING WITH A MTA 100 CONNECTOR ASSEMBLY OR A CST 100 CONNECTOR.
13. PIN BURR OF .005 MAX. VERTICAL AND .003 MAX. HORIZONTAL PERMITTED AT POST TIPS ON BOTH ENDS.

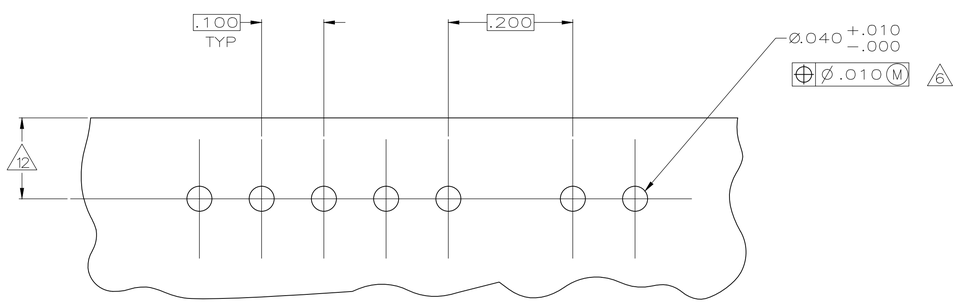

RECOMMENDED MOUNTING HOLE PATTERN FOR .063 THICK P.C. BOARD 2

643606-2 SHOWN

OBSOLETE	1	~~643606-7~~
	5	643606-6
OBSOLETE	7	~~643606-5~~
OBSOLETE	6	~~643606-3~~
	3	643606-2
	4	643606-1
	POST NUMBER OMITTED	PART NUMBER

.040	1.02	.800	20.32
.035	0.89	.535	13.59
.032	0.81	.310	7.87
.025	0.64	.295	7.49
.020	0.51	.225	5.72
.015	0.38	.200	5.08
.010	0.25	.140	3.56
.008	0.20	.130	3.30
.005	0.13	.125	3.18
.003	0.08	.100	2.54
.001	0.03	.063	1.60
.000	0.00	.050	1.27
IN	MM	IN	MM

CONVERSION TABLE

THIS DRAWING IS A CONTROLLED DOCUMENT.

DIMENSIONS: INCHES

TOLERANCES UNLESS OTHERWISE SPECIFIED:
0 PLC ± -
1 PLC ± -
2 PLC ± -
3 PLC ± .005
4 PLC ± -
ANGLES ± -

MATERIAL 7 FINISH 7

DWN L. SMITH 3-30-93
CHK R. SWING 3-30-93
APVD -
PRODUCT SPEC -
APPLICATION SPEC -
WEIGHT -

TE Connectivity

NAME MTA 100 HEADER ASSEMBLY,FRICTION LOCK, NOTCHED,.025 SQUARE STRAIGHT POST,TIN PLATED,

SIZE	CAGE CODE	DRAWING NO	RESTRICTED TO
A1	00779	C-643606	-

CUSTOMER DRAWING SCALE 8:1 SHEET 1 OF 1 REV M2

4805 (3/11)