DATE	DESCRIPTION	REV.
2.17.10	CHANGE AS PER ECN 10–014	A
10.08.13	CHANGE AS PER ECN 13–090	B

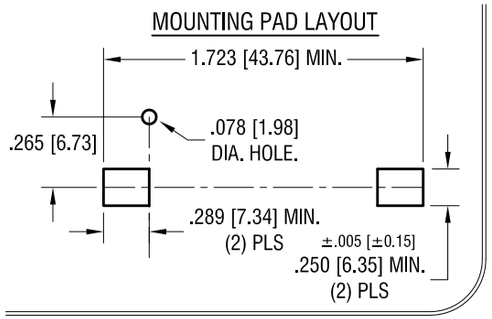

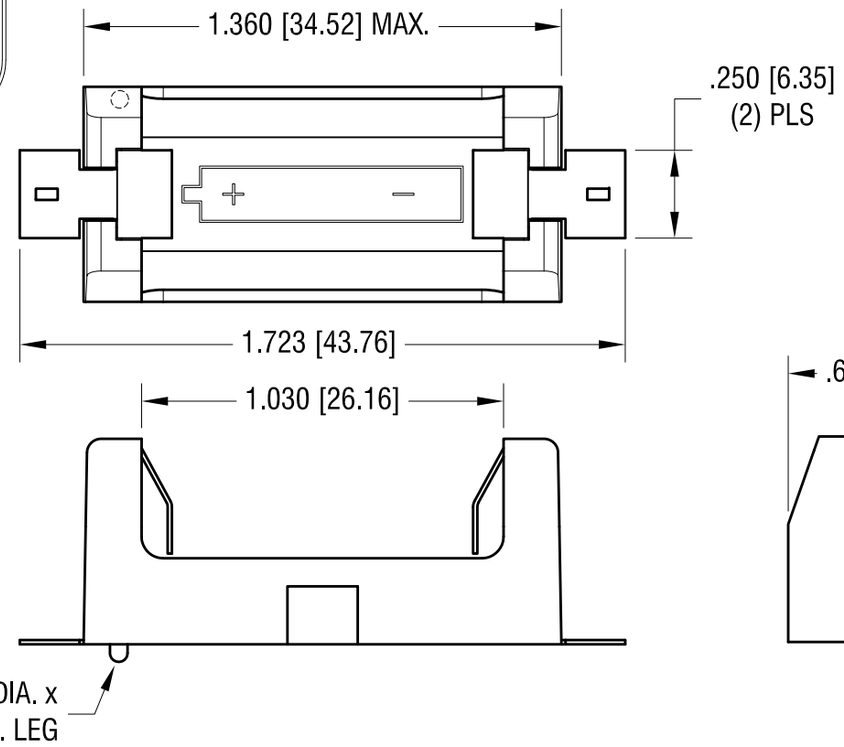

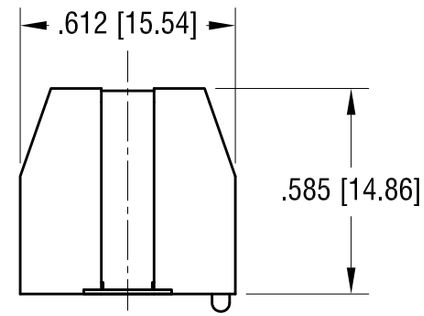

NOTE:
1. BASE:
   MAT'L: HEAT RESISTANCE NYLON
   STANYL 46 OR EQUIVALENT
2. CONTACT:
   MAT'L: .012 [0.30] THK STAINLESS STEEL
   FINISH: GOLD FLASH, OVER NICKEL PLATE.

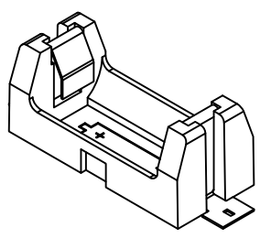

ACTUAL SIZE

THIS DOCUMENT IS THE PROPERTY OF KEYSTONE ELECTRONICS CORP. AND SHALL NOT BE REPRODUCED, DISTRIBUTED OR USED AS A BASIS FOR MANUFACTURE WITHOUT PRIOR WRITTEN PERMISSION FROM KEYSTONE ELECTRONICS CORP.

KEYSTONE ELECTRONICS CORP.

www.keyelco.com • ASTORIA, N.Y. 11105-2017 • Tel (718) 956-8900

PART NAME	SM BATTERY HOLDER, 1/2 AA		
MATERIAL	AS NOTED		
FINISH	AS NOTED	DRN BY NT	DATE 12.09.09
		APP'D LN	SCALE 2X
TOLERANCES INCH [MM] DECIMAL ± .010 [± 0.25] ANGULAR ± 1° UNLESS OTHERWISE SPECIFIED	CODE C	DWG NO. 1016	