REV.	DESCRIPTION	DATE	DESIGNED
△			

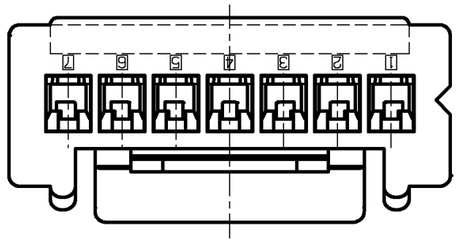

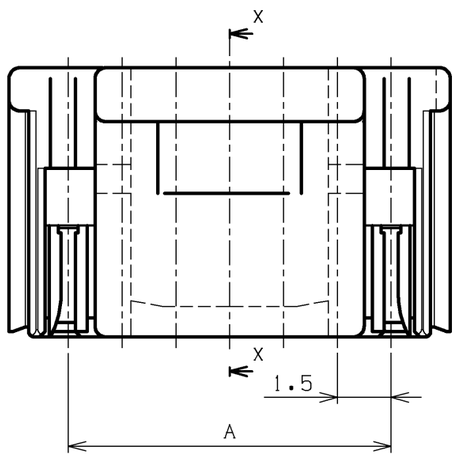

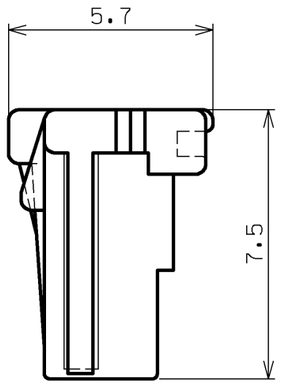

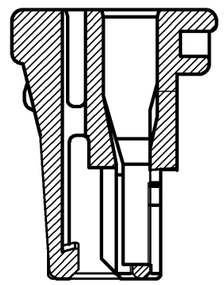

X-X SEC

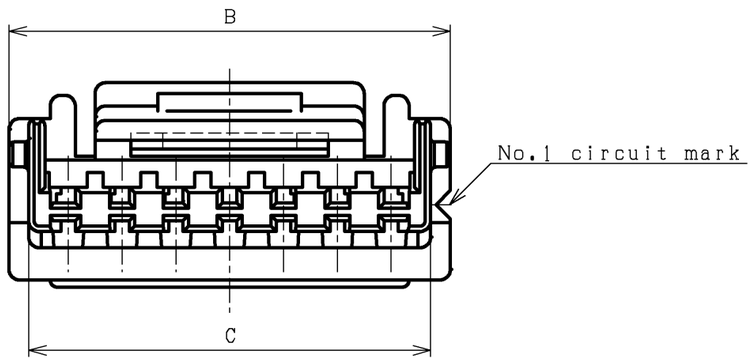

NOTE

1.Unless otherwise specified,
tolerances are : 0≦L≦3.0:±0.3
3.0<L :±0.4

Cir-cuits	Dimensions		
	A	B	C
2	1.5	5.0	3.7
3	3.0	6.3	5.2
4	4.5	7.8	6.7
5	6.0	9.3	8.2
6	7.5	10.8	9.7
7	9.0	12.3	11.2
8	10.5	13.8	12.7
9	12.0	15.3	14.2
10	13.5	16.8	15.7
11	15.0	18.3	17.2
12	16.5	19.8	18.7

COLOR	Part No.
NATURAL	ZER-( )V-S

No.	PART NAME	MATERIAL	SURFACE FINISH	REMARKS
	SOCKET HOUSING	PBT		UL94V-0

SIZE	UNIT	SCALE	PROJECTION	DATE
A3	METRIC	6:1		JAN.15.2007

APPROVEED	CHECKED	DESIGNED	DRAWN
S.K	M.N	T.S	

JST J.S.T.MFG.CO., LTD.

CUSTOMER [redacted]

SERIES NAME	ZE CONNECTOR
PART No.	ZER-( )V-( )
DRAWING No.	KRD-40704 RO

THIS DRAWING CONTAINS INFORMATION THAT IS PROPRIETARY TO J.S.T.
AND SHOULD NOT BE USED WITHOUT WRITTEN PERMISSION.

EC4109-2