THIS DRAWING IS UNPUBLISHED. RELEASED FOR PUBLICATION –,– .
© COPYRIGHT – BY TYCO ELECTRONICS CORPORATION. ALL RIGHTS RESERVED.

LOC	DIST
EA	51

REVISIONS

P	LTR	DESCRIPTION	DATE	DWN	APVD
	2	UPDATE	04OCT06	SM	RP

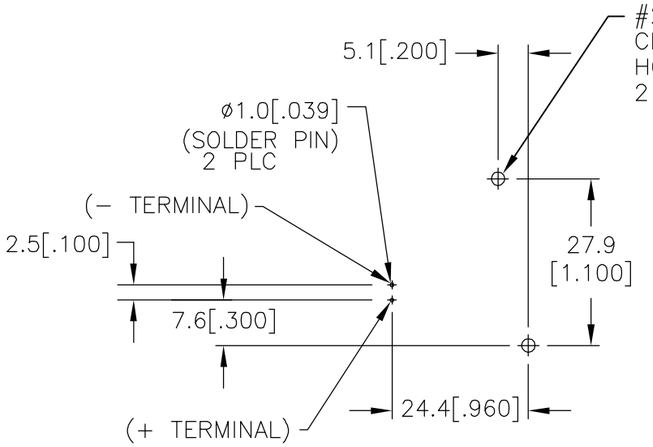

PCB MOUNTING HOLES
TOP VIEW

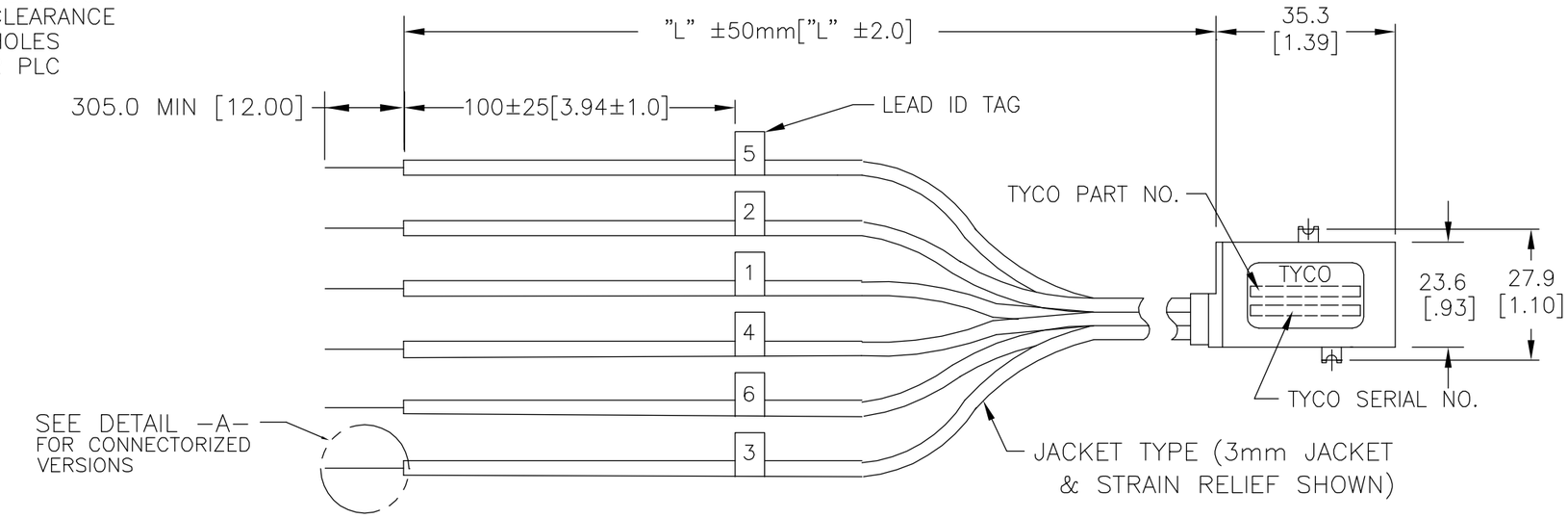

PART NO.	FIBER TYPE	CONNECTOR TYPE
5099974–1	50/125/250	NONE
5099974–2	62.5/125/250	NONE
1–5099974–2	62.5/125/250	SC STYLE
8–5099974–1	50/125/250	SC STYLE
8–5099974–2	62.5/125/250	SC STYLE

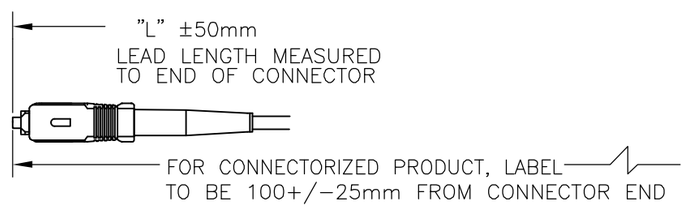

DETAIL A

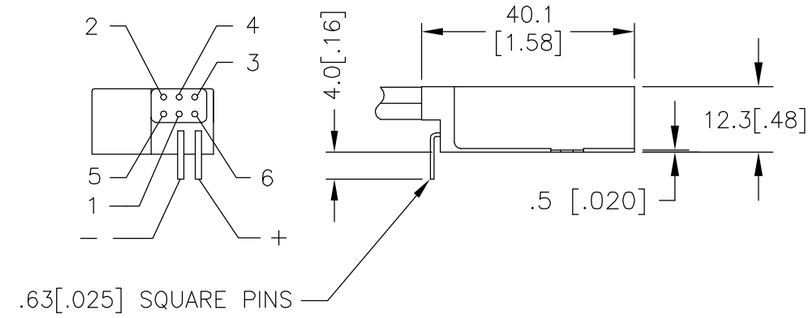

NOTES:

1. DIMENSIONS IN [ ] ARE IN INCHES.
2. PERFORMANCE SPECIFICATIONS

   TESTED PER FOTP–34 METHOD A2

   INSERTION LOSS DATA INCLUDES TWO CONNECTED PAIRS

		UNCONNECTORIZED	CONNECTORIZED
INSERTION LOSS	POWER OFF, 1 TO 2 & 4 TO 5	0.8dB MAX	1.8dB MAX
	POWER ON, 1 TO 3 & 4 TO 6	0.8dB MAX	1.8dB MAX

OPTICAL CROSSTALK	</=–45dB MAX
SWITCHING SPEED	10 MILLISECONDS MAX
POWER REQUIREMENTS	4.0 TO 5.5 VOLTS, 80 ma MAX AT 5.0 VOLTS
OPERATING WAVELENGTH	750nm TO 1450nm
TESTED WAVELENGTH	1300nm

3. THIS PRODUCT HAS NOT COMPLETED VALIDATION TESTING.

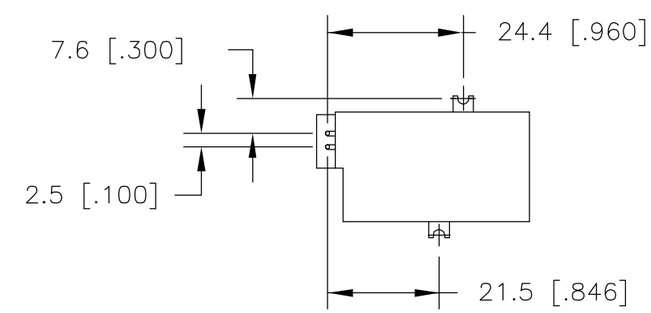

1000 mm (39.5)	8–5099974–2
1000 mm (39.5)	8–5099974–1
400 mm (15.7)	1–5099974–2
1000 mm (39.5)	5099974–2
1000 mm (39.5)	5099974–1
"L" LENGTH	PART NUMBER

PRELIMINARY

THIS DRAWING IS A CONTROLLED DOCUMENT.

DIMENSIONS: mm [INCHES]

TOLERANCES UNLESS OTHERWISE SPECIFIED:

0 PLC	± –
1 PLC	± 0.5
2 PLC	± –
3 PLC	± –
4 PLC	± –
ANGLES	± 2°

MATERIAL –

FINISH –

DWN	S. MONGOLD	17JAN06
CHK	R. PAUL	17JAN06
APVD	F. ABENDSCHEIN	17JAN06
PRODUCT SPEC	–	
APPLICATION SPEC	–	
WEIGHT	–	

tyco Electronics
Tyco Electronics Corporation
Harrisburg, PA 17105–3608

PRELIMINARY

NAME: SWII D1X2 TIN (BENT PIN) –

SIZE	CAGE CODE	DRAWING NO	RESTRICTED TO
A3	00779	C–5099974	–

CUSTOMER DRAWING

SCALE	SHEET	REV
1:1	1 OF 1	2