DC axial fan

Series 3400 N 92 x 92 x 25

- **General description:** DC fan with electronically commutated external rotor motor. Commutation electronics completely integrated.
- **Impeller material:** Fiberglass-reinforced PA plastic
- **Housing material:** Fiberglass-reinforced PBTP plastic

Nominal data		Voltage	Voltage range VDC	Air flow	Speed	Power consumption	Sound level	Sound pressure level	Ambient temperature	L10 service life at 40 °C	L10 service life at max. temp.	Weight
Type	**Motor**	**VDC**	**VDC**	**m³/h**	**1/min**	**W**	**Bel**	**dB(A)**	**°C**	**h**	**h**	**kg**
3412 N	--	12	8 - 15	84	2700	2.2	4.7	32	-20 .. 70	70000	35000	0.100

Subject to modification

Characteristic: Pressure over air flow

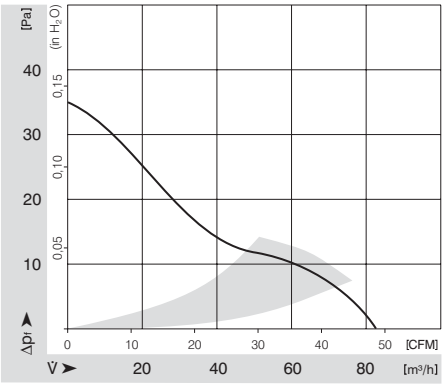

ebmpapst

DC axial fan

Series 3400 N 92 x 92 x 25

Specific drawing

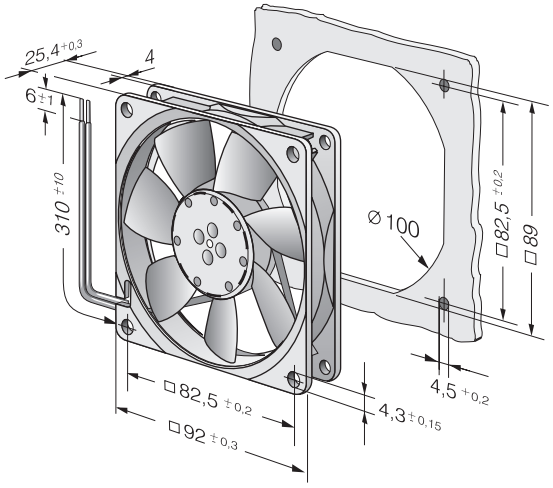

Technical description

- **General description:** DC fan with electronically commutated external rotor motor. Commutation electronics completely integrated.
- **Housing material:** Fiberglass-reinforced PBTP plastic
- **Direction of rotation:** Left, looking at rotor
- **Electrical connection:** Single strands AWG 24, TR 64
- **Locked-rotor protection:** Locked-rotor and overload protection
- **Option:** Speed signal, Vario-Pro
- **Impeller material:** Fiberglass-reinforced PA plastic
- **Bearings:** Ball bearings
- **Direction of air flow:** Air exhaust over bars
- **Motor protection:** Reverse-polarity protected. The fan runs only if the polarity is correct.
- **Approvals:** VDE, CSA, UL, CE

Contact

ebm-papst St. Georgen GmbH & Co. KG
Hermann-Papst-Straße 1
D-78112 St. Georgen
Phone +49 (0) 7724 / 81-0
Fax +49 (0) 7724 / 81-1309
info2@de.ebmpapst.com
www.ebmpapst.com

Sensor signal /2

- Speed-proportional rectangular pulse for external speed monitoring of fan motor
- 2 pulses per revolution / 6 pulses per revolution by TURBOFANS.
- Open-Collector signal output
- Extremely wide operating voltage range (5 ... 60 V)
- Easy adaptation to user interface
- Connection via separate lead
- The sensor signal also serves as a major comparison variable for setting and maintaining the desired speed for interactive or controlled cooling with one or several interconnected fans.

Electrical connection

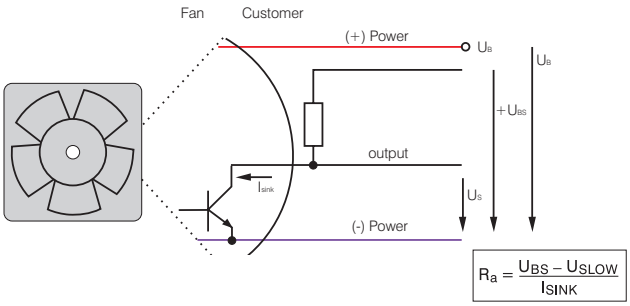

All voltages measured to ground.
External load resistance R_a / U_S / U_{BS} required.

Signal output voltage

all modells but not TD-Fans

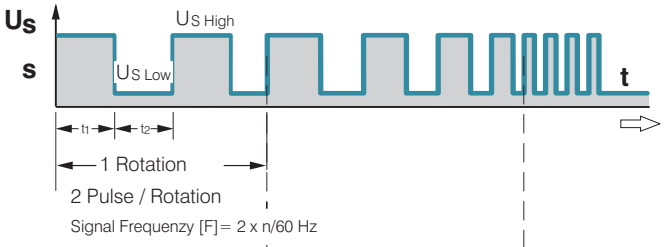

only TD-Fans

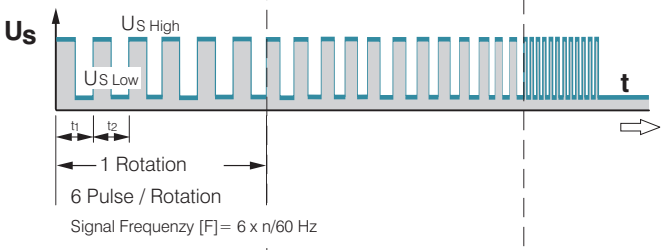

Fan speed

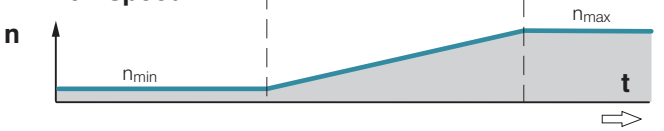

Signal data	Sensor signal $U_{S\,Low}$	Condition: I_{sink}	Sensor signal $U_{S\,High}$	Condition: I_{source}	Sensor operating voltage U_{BS}	Perm. sink current $I_{sink\,max.}$
Type	**V DC**	**mA**	**V DC**	**mA**	**V DC**	**mA**
250	≤0.4	≤2	30	0	≤30	2
400 F	≤0.4	1	30	0	≤30	≤2
400	≤0.4	1	30	0	≤30	≤2
412 J	≤0.4	2	30	0	≤30	≤4
414 J	≤0.4	2	30	0	≤30	≤4
500 F	≤0.4	1	30	0	≤30	≤2
600 F	≤0.4	1	30	0	≤30	≤2
620	≤0.4	2	30	0	≤30	≤4
600 N	≤0.4	2	30	0	≤30	≤4
600 J	≤0.4	2	30	0	≤30	≤4
700 F	≤0.4	2	30	0	≤30	≤4
8400 N	≤0.4	2	28	0	≤28	≤4
8300	≤0.4	2	30	0	≤30	≤4
8200 J	≤0.4	2	30	0	≤30	≤4
3400 N	≤0.4	2	28	0	≤28	≤4
3300	≤0.4	2	30	0	≤30	≤4
3200 J	≤0.4	2	30	0	≤30	≤4
4400 F	≤0.4	2	30	0	≤30	≤4
4300 N	≤0.4	2	30	0	≤30	≤4
4300	≤0.4	2	30	0	≤30	≤4
4400	≤0.4	2	30	0	≤30	≤4
4212	≤0.4	2	30	0	≤30	≤4
4214	≤0.4	2	30	0	4–30	≤4
4218	≤0.4	2	30	0	4–30	≤4
4100 N	≤0.4	2	30	0	4–30	≤4
DV 4100	≤0.4	2	30	0	≤30	≤4
5200 N	≤0.4	2	30	0	4–30	≤4
DV 5200	≤0.4	2	30	0	≤30	≤4
5112 N	≤0.4	2	15	0	≤5	≤20
5114 N	≤0.4	2	60	0	≤60	≤20
5118 N	≤0.4	2	60	0	≤60	≤20
7112 N	≤0.4	2	60	0	≤60	≤20
7114 N	≤0.4	2	30	0	≤30	≤20
7118 N	≤0.4	2	60	0	≤60	≤20

Available on request:

- Galvanically separated sensor signal circuit
- Varying voltage potentials for power and logic circuit.

Signal data	Sensor signal $U_{S\,Low}$	Condition: I_{sink}	Sensor signal $U_{S\,High}$	Condition: I_{source}	Sensor operating voltage U_{SS}	Perm. sink current $I_{sink\,max.}$
Type	**V DC**	**mA**	**V DC**	**mA**	**V DC**	**mA**
6224 N	≤0.4	8	30	0	≤30	≤20
6248 N	≤0.4	8	60	0	≤30	≤20
DV 6200	≤0.4	2	30	0	≤60	≤20
6400	≤0.4	2	60	0	≤60	≤20
RL 48	≤0.4	2	28	0	4–30	≤4
RL 65	≤0.4	2	30	0	≤30	≤4
RL 90 N	≤0.4	2	30	0	≤30	≤4
RLF 100	≤0.4	2	30	0	≤30	≤4
RG 90 N	≤0.4	2	30	0	≤30	≤4
RG 125 N	≤0.4	2	30	0	≤30	≤4
RG 160 N	≤0.4	2	30	0	≤30	≤20
REF 100	≤0.4	2	30	0	≤30	≤4

Attention:
With these fan options, deviations in regard to temperature range, voltage range and power consumption are possible compared with standard fan data.