THIS DRAWING IS UNPUBLISHED. RELEASED FOR PUBLICATION - ,- .
© COPYRIGHT - By - ALL RIGHTS RESERVED.

LOC	DIST
AA	00

REVISIONS

P	LTR	DESCRIPTION	DATE	DWN	APVD
	B1	REVISED PER ECO-11-005140	28MAR11	RK	HMR

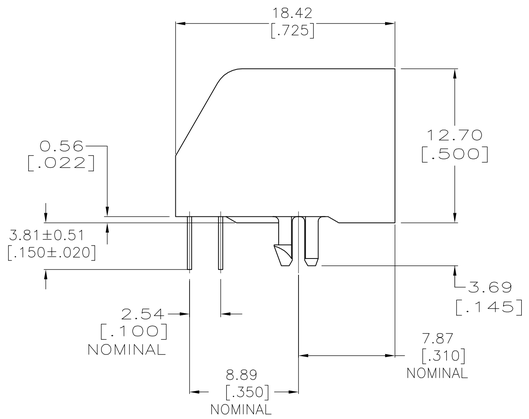

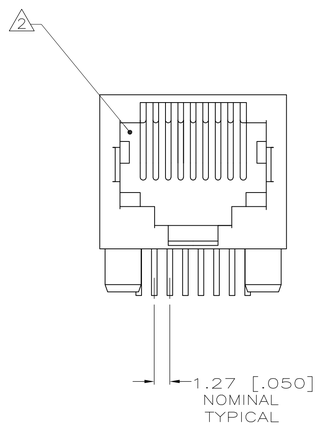

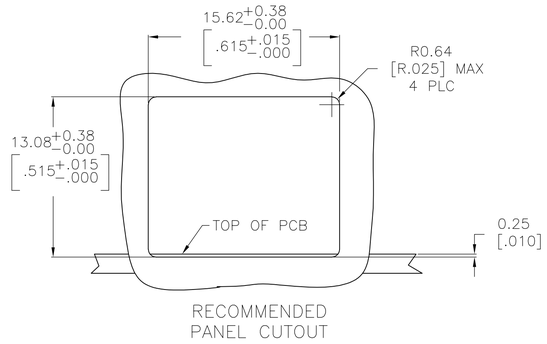

1. MATERIAL:
HOUSING – PBT POLYESTER, COLOR: BLACK
TERMINAL – 0.36 [.014] THICK PHOS BRONZE PLATED WITH 1.27μm [.000050] MINIMUM THICK HARD GOLD IN LOCALIZED GOLD PLATE AREA AND 2.03μm [.000080] MINIMUM THICK MATTE TIN IN SOLDER AREA OVER 1.27μm [.000050] THICK NICKEL UNDERPLATE.

2. CAVITY CONFORMS TO FCC RULES AND REGULATIONS PART 68, SUBPART F.

3. DIMENSIONS ARE MAXIMUM UNLESS OTHERWISE SPECIFIED.

4. BULK PACKAGED IN A TRAY.

5. 37 ASSEMBLLIES PACKAGED PER TUBE

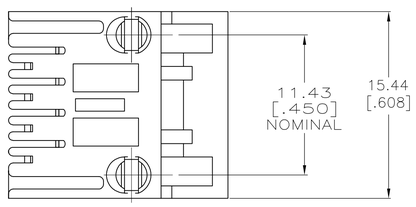

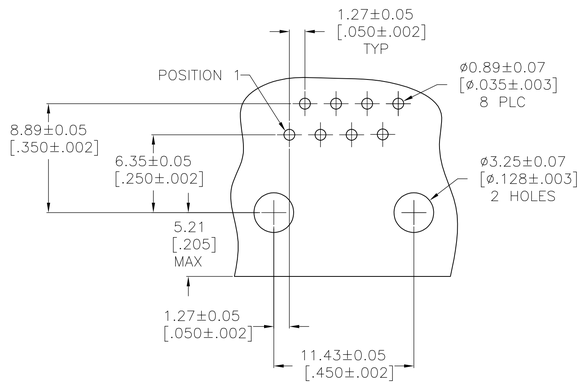

RECOMMENDED PRINTED CIRCUIT BOARD LAYOUT
COMPONENT SIDE SHOWN

5	8	5555164-4
4	8	5555164-1
PACKAGED	TERMINALS REQUIRED	PART NUMBER

THIS DRAWING IS A CONTROLLED DOCUMENT.

DIMENSIONS: mm [INCHES]

TOLERANCES UNLESS OTHERWISE SPECIFIED:
0 PLC ± –
1 PLC ± –
2 PLC ± 0.13[.005]
3 PLC ± –
4 PLC ± –
ANGLES ± –

MATERIAL: SEE NOTE 1
FINISH: SEE NOTE 1

DWN 08JUN2005 G. ATTADIA – DOCKS
CHK 08JUN2005 J. WESTMAN
APVD 08JUN2005 S. FLICKINGER
PRODUCT SPEC 108-1163
APPLICATION SPEC 114-2048
WEIGHT –

TE Connectivity

NAME: MODULAR JACK ASSEMBLY, 8 POSITION, LOW PROFILE, RIGHT ANGLE, WITHOUT PANEL STOPS

SIZE	CAGE CODE	DRAWING NO	RESTRICTED TO
A1	00779	C-5555164	–

CUSTOMER DRAWING | SCALE 4:1 | SHEET 1 OF 1 | REV B1