THIS DRAWING IS A CONTROLLED DOCUMENT.

LOC	DIST
HJ	-

REVISIONS

P	LTR	DESCRIPTION	DATE	DWN	APVD
	A4	Doc change D02309-DOK51 to C-1462034-2	30Jan2006	UKo	HD
	A5	change marking	28Jul2006	UKo	HD
	A6	REVISED PER ECO-11-005150	23MAR2011	RK	HMR
	A7	REVISED PER ECO-13-009556	14JUN2013	UKo	AK

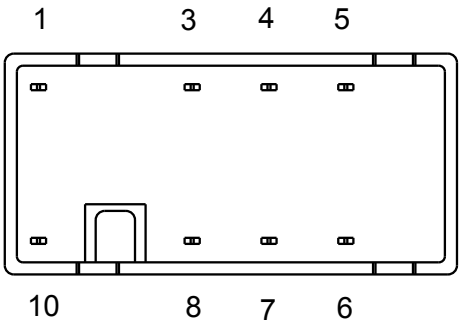

Relay - bottom view

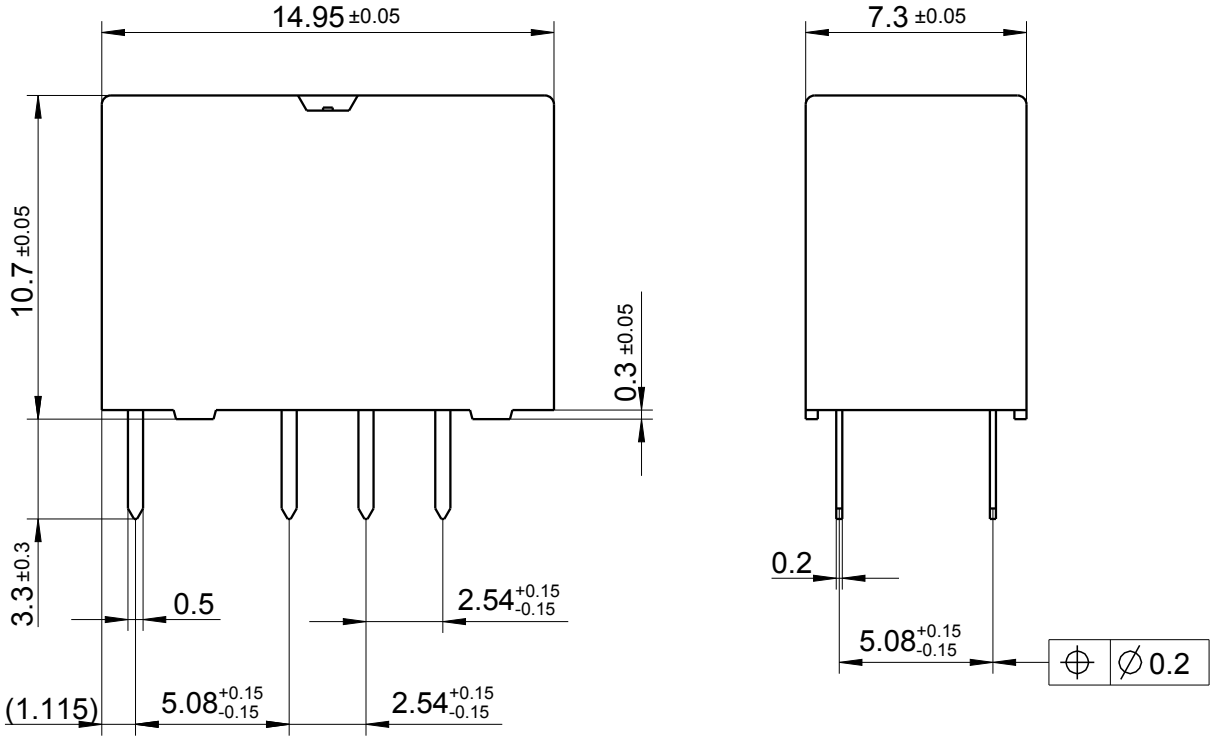

xxxx = Relay type
zz = nominal voltage
YYWW = Date code

DRAWING ALIAS: D02309-DOK51

DIMENSIONS:	DWN RG 9181	21MAR1995	MATERIAL -	FINISH -
mm	CHK HD 9121	21MAR1995	TE Connectivity	
TOLERANCES UNLESS OTHERWISE SPECIFIED: DIN 7168-m	APVD HD 9121	21MAR1995		
0 PLC ±-	PRODUCT SPEC -		NAME FX2-Relay Dimensions	
1 PLC ±-				
2 PLC ±-				
3 PLC ±-	APPLICATION SPEC -			
4 PLC ±-				
ANGLES ±-	WEIGHT -		SIZE A4 / CAGE CODE 00779 / DRAWING NO C- 1462034-2	RESTRICTED TO -
CUSTOMER DRAWING			SCALE 4:1 / SHEET 1 OF 1	REV A7

THIS DRAWING IS UNPUBLISHED. © COPYRIGHT 2006 ALL RIGHTS RESERVED. RELEASED FOR PUBLICATION 2006