THIS DRAWING IS UNPUBLISHED. RELEASED FOR PUBLICATION 2000
© COPYRIGHT 2000 BY TYCO ELECTRONICS CORPORATION. ALL RIGHTS RESERVED.

LOC	DIST
IS	–

REVISIONS

P	LTR	DESCRIPTION	DATE	DWN	APVD
	A	-	5/04/01	BL	KM
	A1	P/N Correction G76A	11MAY2005	LDu	RL
	B	ECR-07-030562	18DEC2007	MS	DB

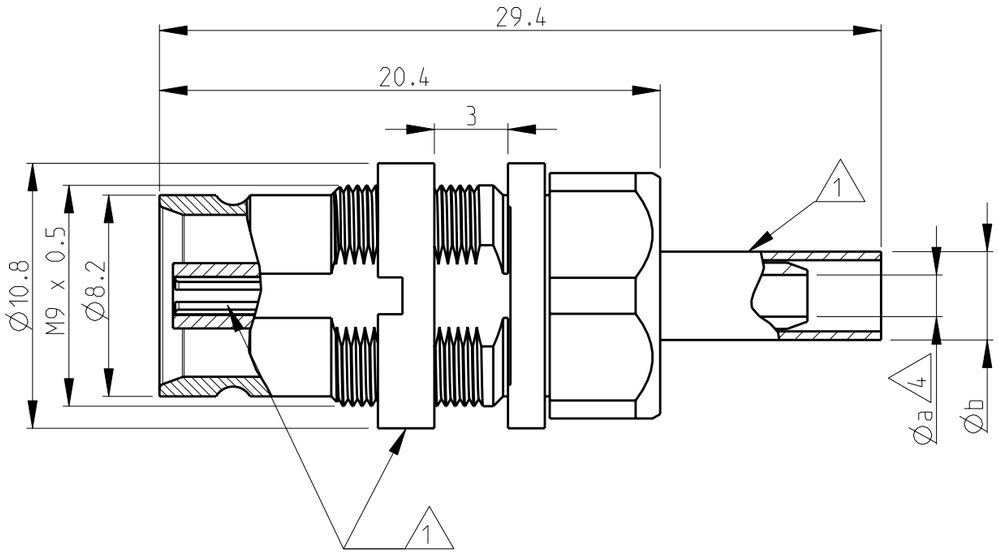

5 Packed in tray

4 Minimum dimension.

3) Standard: according to CECC 22240 and DIN 47295.

2) All dimensions are maximum dimensions unless otherwise specified.

1 Supplied as loose part.

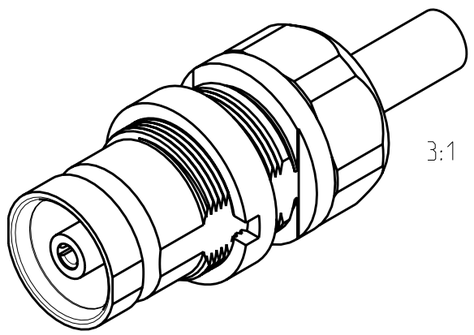

Cross reference tabel

Old part number	TE part number	Description	Material	Plating	Øa	Øb	Cable type
V23612-A602-G41	2-1393680-2	Outer conductor	Brass	min 0.1µm Au over min 2µm NiP	1.7	3.6	RG179 B/U
		Dielectric	PEEK/PC	-			
		Center conductor	CuBe/Bronze	min 0.1µm Au over min 2µm NiP			
V23612-A602-G41A 5	2-1393680-3 5	Outer conductor	Brass	min 0.1µm Au over min 2µm NiP	1.7	3.6	RG179 B/U
		Dielectric	PEEK/PC	-			
		Center conductor	CuBe/Bronze	min 0.1µm Au over min 2µm NiP			
V23612-A602-G62	2-1393680-4	Outer conductor	Brass	min 0.1µm Au over min 2µm NiP	2.15	5.2	02XSC(mS) C6Y 0.45/2.0
		Dielectric	PEEK/PC	-			
		Center conductor	CuBe/Bronze	min 0.1µm Au over min 2µm NiP			
V23612-A602-G73	2-1393680-5	Outer conductor	Brass	min 0.1µm Au over min 2µm NiP	1.7	4.3	02XSCC(St) 6Y 0.37/1.6
		Dielectric	PEEK/PC	-			
		Center conductor	CuBe/Bronze	min 0.1µm Au over min 2µm NiP			
V23612-A602-G76	1393672-6	Outer conductor	Brass	min 0.1µm Au over min 2µm NiP	2.15	5.2	02Y(St)CY 0.45/2.0
		Dielectric	PEEK/PC	-			
		Center conductor	CuBe/Bronze	min 0.1µm Au over min 2µm NiP			
V23612-A602-G76A 5	2-1393680-6 5	Outer conductor	Brass	min 0.1µm Au over min 2µm NiP	2.15	5.2	02Y(St)CY 0.45/2.0
		Dielectric	PEEK/PC	-			
		Center conductor	CuBe/Bronze	min 0.1µm Au over min 2µm NiP			

THIS DRAWING IS A CONTROLLED DOCUMENT FOR TYCO ELECTRONICS CORPORATION IT IS SUBJECT TO CHANGE AND THE CONTROLLING ENGINEERING ORGANIZATION SHOULD BE CONTACTED FOR THE LATEST REVISION.

DIMENSIONS: mm

TOLERANCES UNLESS OTHERWISE SPECIFIED:
0 PLC ±-
1 PLC ±-
2 PLC ±-
3 PLC ±-
4 PLC ±-
ANGLES ±-

MATERIAL -
FINISH -

DWN B. Lenvain 28FEB2001
CHK K. Mattheeuws 05APR2001
APVD R. Leeman 05APR2001
PRODUCT SPEC -
APPLICATION SPEC 114-71019
WEIGHT -

Tyco Electronics
Tyco Electronics
CH - Switzerland - Lugano

NAME Cable jack 1.6/5.6 (75 ohm)
-
-

SIZE	CAGE CODE	DRAWING NO	RESTRICTED TO
A3	00779	C-2-1393680-2	-

CUSTOMER DRAWING
SCALE 4:1 SHEET 1 OF 1 REV B