REV.	DESCRIPTION	DATE	DESIGNED
1	Color part No. is added.	AUG. 3.2007	T.S
2	Circuit No. are added.	JAN.23.2008	T.S

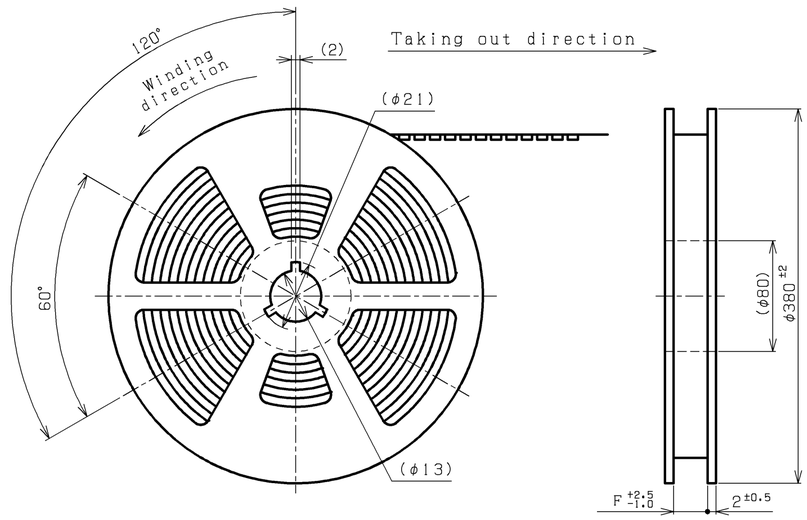

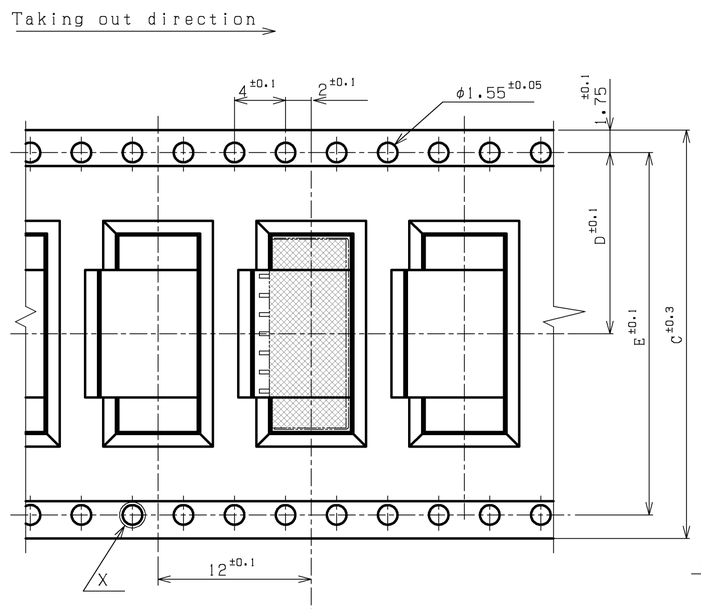

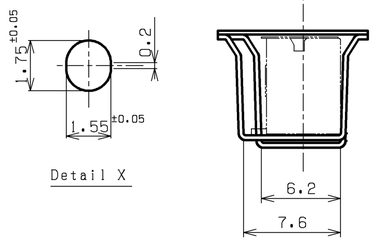

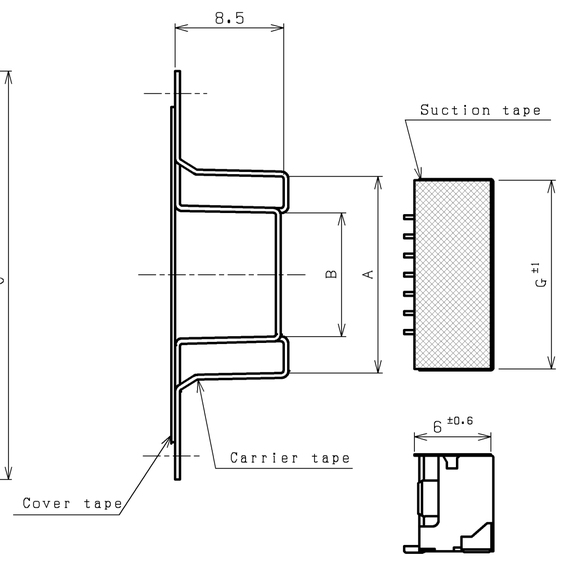

SUCTION TAPE CONFIGURATION

	Color	Part No.
	Natural	BM( )-ZESS-TBT (LF)(SN)
1	Moss green	BM( )-ZEMGS-TBT (LF)(SN)

NOTE

1.Connector part:See the DWG. of ZE Connector.

2.Quantity to be packaged:800pcs/reel

3.Leading tape length.

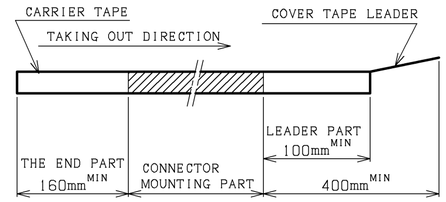

4.Cover tape peel strength:0.1~1N
(Peel speed:300mm/minute)

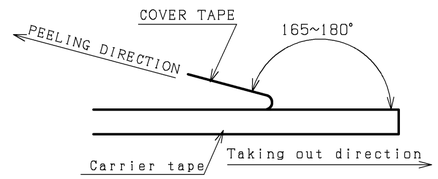

5.Material:Carrier tape; Polyester(PET)
Cover tape ; Polyester(PET)
Reel ;Flange; Polystyrene(PS)
Core; Polypropylene(PP)
Polystyrene(PS)

6.Unless otherwise specified,
tolerances are ±0.3

	Cir-cuits	Dimensions						
		A	B	C	D	E	F	G
	7	15.4	9.7	32.0	14.2	28.4	33.5	14.8
	8	16.9	11.2	32.0	14.2	28.4	33.5	16.3
	9	18.4	12.7	32.0	14.2	28.4	33.5	17.8
	10	19.9	14.2	32.0	14.2	28.4	33.5	19.3
	11	21.4	15.7	44.0	20.2	40.4	45.5	20.8
	12	22.9	17.2	44.0	20.2	40.4	45.5	22.3
2	13	24.4	18.7	44.0	20.2	40.4	45.5	23.8
2	14	25.9	20.2	44.0	20.2	40.4	45.5	25.3
2	15	27.4	21.7	44.0	20.2	40.4	45.5	26.8
2	16	28.9	23.2	44.0	20.2	40.4	45.5	28.3

No.	PART NAME	MATERIAL	SURFACE FINISH	REMARKS

SIZE	UNIT	SCALE	PROJECTION	DATE
A2	METRIC	3:1		AUG. 3.2007

APPROVED	CHECKED	DESIGNED	DRAWN
S.K	E.N	T.S	

JST J.S.T.MFG.CO., LTD.

CUSTOMER	
SERIES NAME	ZE CONNECTOR EMBOSSED-TAPING
PART No.	BM( )B-ZE( )S-TBT (LF)(SN)
DRAWING No.	KRD-41788 R2

EC4113-2

THIS DRAWING CONTAINS INFORMATION THAT IS PROPRIETARY TO J.S.T.
AND SHOULD NOT BE USED WITHOUT WRITTEN PERMISSION.