used for: D-SUB HD

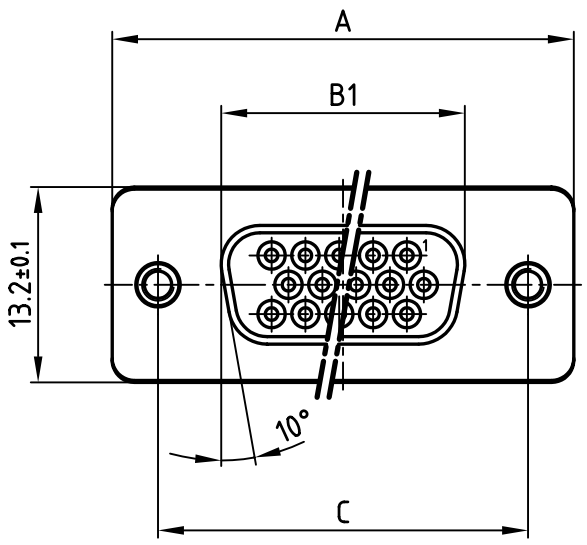

POS.	A -0.76	B1 -0.25	B2 +0.25	C	D -0.3	Art-Nr.
15	31.19	16.46	16.79	25.00 +0.12 -0.13	6.12	**164A03399X**
26	39.52	24.79	25.12	33.30 +0.15 -0.1	6.12	**164A03919X**
44	53.42	38.50	38.84	47.04 ±0.13	5.99	**164A03929X**
62	69.70	54.96	55.30	63.50 ±0.13	5.99	**164A03939X**

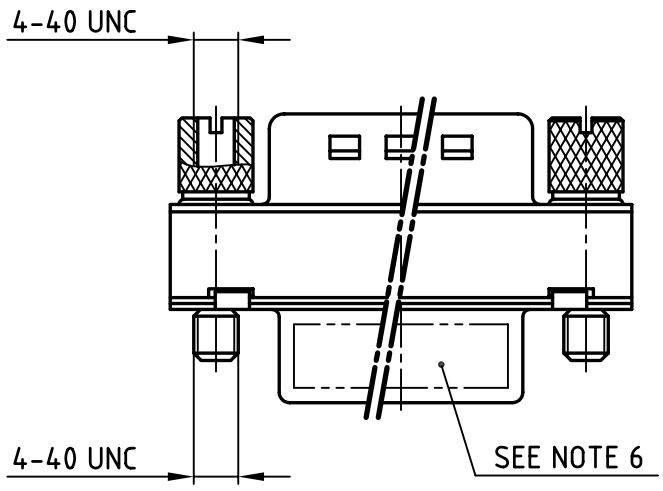

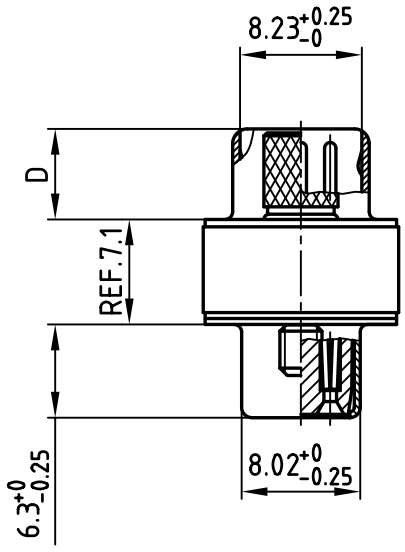

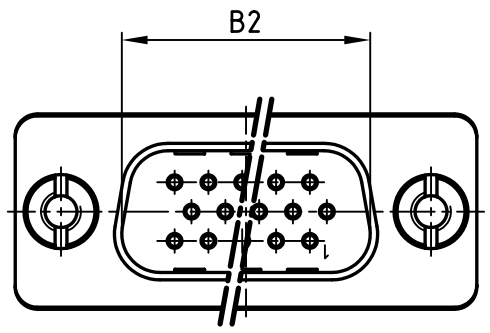

NOTES:

1. METALSHELLS: STEEL; min. 320µin TIN
2. INSULATORS: PBT GF UL 94 V-0, BLACK
3. CONTACTS: COPPER ALLOY
   PLATING: 8µin HARD GOLD OVER min. 50µin NICKEL
4. THREADED INSERT: COPPER ALLOY; min. 200µin TIN over 80µin NICKEL
5. MAXIMUM TORQUE VALUE FOR THREAD: 6 in.LB
6. CONNECTOR IS PART MARKED: PART-NO. CONEC ABC

Directive 2002/95/EC „RoHS" Compliant

APPROVAL # FREIGABE # DEBLOCAGE # AUTOR/ZACION # APPROVAL

CUSTOMER APPROVAL DATE:

NAME: TITLE:

COMPANY NAME:

THIS DRAWING MAY NOT BE COPIED OR REPRODUCED IN ANY WAY, AND MAY NOT BE PASSED ON TO A THIRD PARTY WITHOUT WRITTEN PERMISSION. OWNERSHIP AND COPYRIGHT OF CONEC GmbH

DO NOT ALTER CAD DRAWING BY HAND

rev.	description	date	name

tolerance — dim. in mm

	date	name
2005		
drawn	03.05.	Schmidt
appd.	03.05.	Kühle
norm	DIN 41652	
d-old		

CONEC®

scale: 2:1
material: SEE NOTES

title:
D-SUB HD ADAPTER
15-62pos. MALE / FEMALE
with Adapter screws 4-40 UNC

dwg no: 16K1A1393
AutoCAD 2004 | DIN-A 3 | sh: 1/1

part no: SEE TABLE