© – TE Connectivity. All Rights Reserved.

REVISIONS					
P	LTR	DESCRIPTION	DATE	DWN	APVD
	T	REV PER ECO 19-019228	4-17-20	CT	DM

1. CONTACTS INCLUDED IN ASSEMBLY.
2. MATL: STEEL, PER ASTM-A-109.
3. FINISH: CADIUM PER QQ-P-416.
4. CONTACT
   BODY MATL: BERYLLIUM COPPER PER ASTM-B-197.
   BODY FINISH: PLATED GOLD, .000050 MIN THK PER MIL-G-45204 OVER NICKEL, .000050 MIN THK PER QQ-N-290.
   HOOD MATL: STAINLESS STEEL PER ASTM-A-167.
   HOOD FINISH: PASSIVATED PER ASTM-A-380
5. FINISH: PLATED ZINC .00020 MIN THK PER ASTM-B-633. YELLOW CHROMATE FINISH.
6. MATL: BRASS PER ASTM-B-36.
7. FINISH: PLATED GOLD, .000050 MIN THK PER MIL-G-45204 OVER COPPER, .000100 MIN THK PER MIL-C-14550.
8. CONTACT
   BODY MATL: BERYLLIUM COPPER PER ASTM-B-197.
   BODY AND HOOD FINISH: PLATED GOLD, .000050 MIN THK PER MIL-G-45204 OVER COPPER, .000100 MIN THK PER MIL-C-14550.
   HOOD MATL: BRASS PER ASTM-B-36
9. FINISH: PLATED ZINC PER ASTM-B-633 .000200 MIN THK WITH SUPPLEMENTARY CHROMATE (Cr3+).

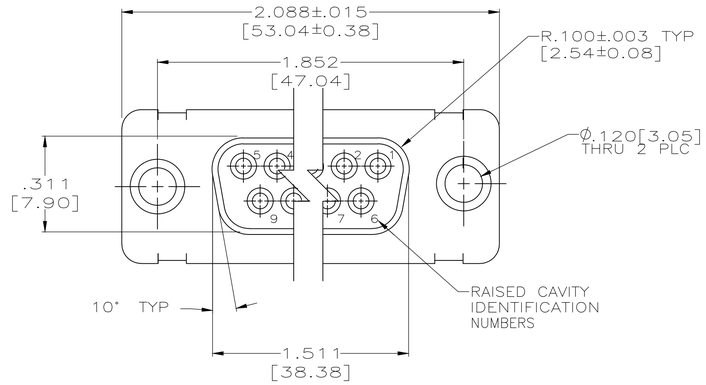

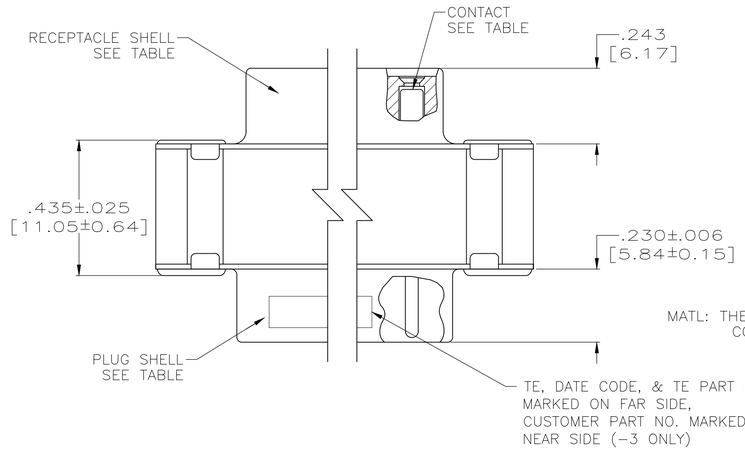

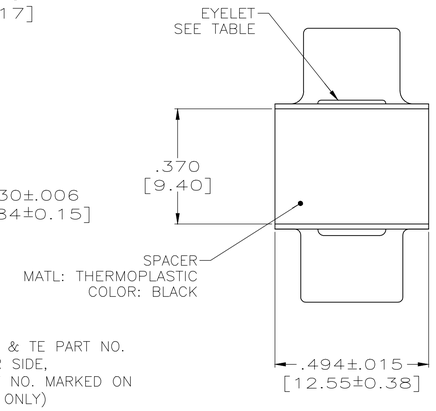

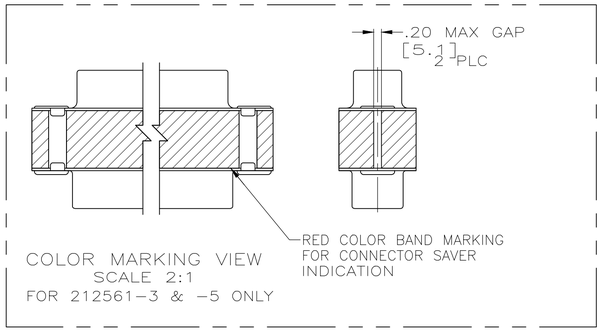

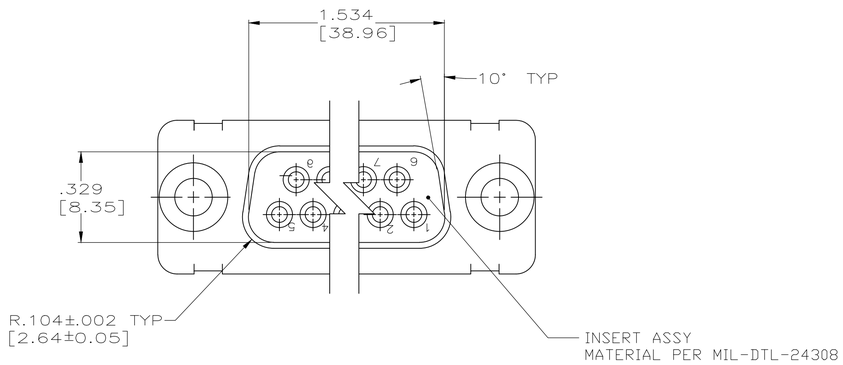

	EYELET	SHELLS	CONTACT	CUSTOMER P/N	PART NO.
	6 9	2 9	4	–	5-212561-1
	6 7	7 6	8	PT2-111-9	212561-6
	6 7	7 6	4	4U884 SOCN R10002677-0103	212561-5
OBSOLETE	6 7	7 6	4	–	212561-4
	6 7	7 6	4	(1J02-103)	212561-3
	6 7	7 6	8	–	212561-2
	6 5	2 3	4	–	212561-1

THIS DRAWING IS A CONTROLLED DOCUMENT.

DIMENSIONS: INCHES

TOLERANCES UNLESS OTHERWISE SPECIFIED:
0 PLC ± –
1 PLC ± –
2 PLC ± –
3 PLC ± .005 [0.13]
4 PLC ± –
ANGLES ± –

MATERIAL –
FINISH –

DWN T. THOMPSON 11-07-94
CHK D. MANTIONE –
APVD D. MANTIONE –
PRODUCT SPEC —
APPLICATION SPEC —
WEIGHT 0.000000

TE Connectivity

NAME CONNECTOR SAVER, AMPLIMITE 25 POSITION, SIZE 3, SERIES 109 –

SIZE	CAGE CODE	DRAWING NO	RESTRICTED TO
A1	00779	C-212561	—

CUSTOMER DRAWING | SCALE 4:1 | SHEET 1 OF 1 | REV T

4805 (1/15)