THIS DRAWING IS UNPUBLISHED. RELEASED FOR PUBLICATION -,- .
© COPYRIGHT - By - ALL RIGHTS RESERVED.

LOC	DIST
—	—

REVISIONS

P	LTR	DESCRIPTION	DATE	DWN	APVD
	C	REV PER ECO-12-013349	20JUL12	PY	RG

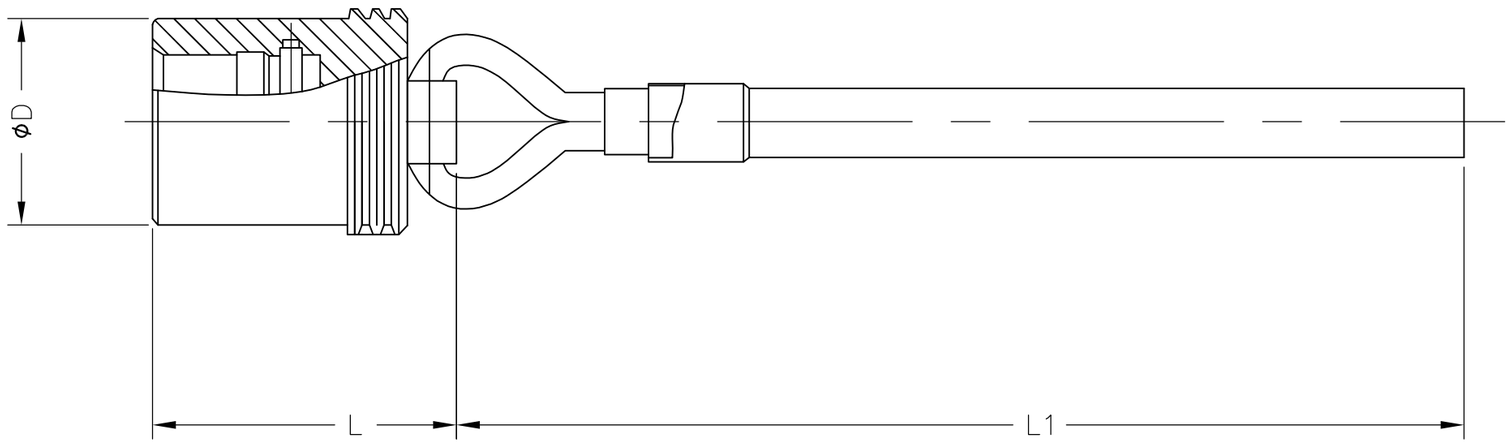

CLIP FOR SECURING LANYARD

D	L1	L	PART NUMBER
21	165	29	2101580-2
15	115	21	2101580-1

1. MATERIAL
   BODY - BRASS
   LANYARD - BROCADED SILK
   O RING - SILICONE RUBBER
2. FINISH
   CAP - BLACK CHROMATE

THIS DRAWING IS A CONTROLLED DOCUMENT.

DIMENSIONS: mm

TOLERANCES UNLESS OTHERWISE SPECIFIED:
0 PLC ± 3
1 PLC ± -
2 PLC ± -
3 PLC ± -
4 PLC ± -
ANGLES ± -

MATERIAL - 1

FINISH - 2

DWN C C THOMAS 16SEP2009
CHK R GROSS 16SEP2009
APVD R GROSS 16SEP2009
PRODUCT SPEC 108-127005
APPLICATION SPEC —
WEIGHT —

TE Connectivity

NAME
CIRCULAR HD CAPS W/LANYARDS
FOR SIZE 2 & 5 PLUG CONNECTORS
-

SIZE	CAGE CODE	DRAWING NO	RESTRICTED TO
A3	00779	C-2101580	—

CUSTOMER DRAWING

SCALE	SHEET	REV
NTS	1 OF 1	C