31-40706	REVISIONS				
DRAWING NO.	REV	DESCRIPTION	DATE	ECO	APPR
THIRD ANGLE PROJ.	A	RELEASE TO MFG.	7/17/03	44556	CPM

NOTES:

1. MATERIALS OF CONSTRUCTION:
   HOUSING, BODY, SPACER, HEX NUT & FERRULE = BRASS (ASTM-B16 H02, C36000), NICKEL PLATED (.000100 MIN THICK)
   CONTACT PIN = PHOSPHOR BRONZE (QQ-B-750), GOLD PLATED (.000030 MIN THICK)
   LOCKWASHER = BRASS (QQ-B-613), NICKEL PLATED (.000100 MIN THICK)
   INSULATOR & SLEEVE = PTFE PER ASTM D 1710 OR EQUIV.
   GASKET = SILICONE RUBBER, COLOR RED

2. ELECTRICAL:

   A. IMPEDANCE = 50 OHMS, NOMINAL
   B. FREQUENCY RANGE = DC - 3.0 GHz
   C. VSWR (RETURN LOSS) = 1.200 MAX. (20.8 dB)

3. PHYSICAL:

   A. TEMPERATURE RANGE = -65°C TO +165°C (-85°F TO +329°F)
   B. INTERFACE = MEETS MIL-STD-348, BNC SERIES, FIGURE 301.2
   C. CRIMP TOOLS = CONTACT: .028 HEX, FERRULE: .130 HEX

4. PACKAGING:

   A. INDIVIDUALLY BAG EACH CONNECTOR
   B. MARK BAG: NORTEL CPC: A0602206
   AMPHENOL P/N: 31-40706
   DATE CODE: (YYWW)

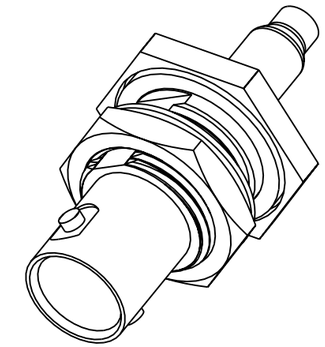

SCALE 2.000

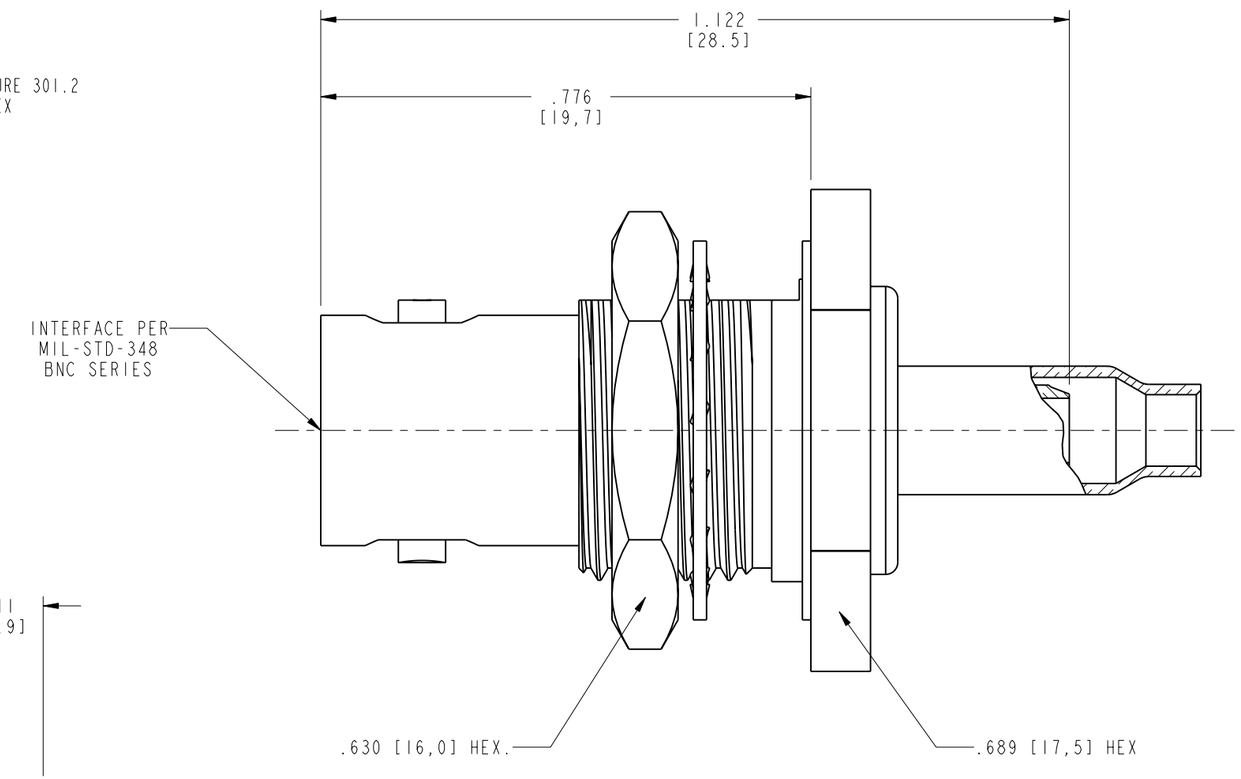

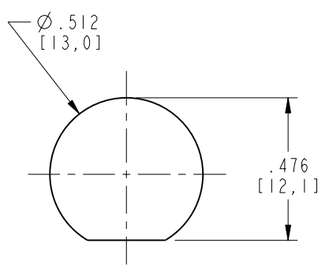

RECOMMENDED MOUNTING HOLE DIMENSIONS
SCALE 2.000

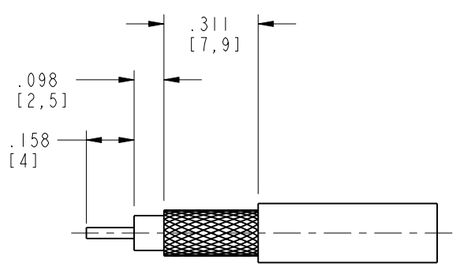

RECOMMENDED CABLE STRIPPING DIMENSIONS
SCALE 2.000

CUSTOMER OUTLINE DRAWING
ALL OTHER SHEETS ARE FOR INTERNAL USE ONLY

UNLESS OTHERWISE SPECIFIED, DIMENSIONS ARE IN MM (INCHES) AND TOLERANCES ARE:

0.5 - 6mm	6 - 30mm	30 - 120mm
±0.2mm	±0.4mm	± 0.6mm

NOTICE - These drawings, specifications, or other data (1) are, and remain the property of Amphenol Corp. (2) must be returned upon request; and (3) are confidential and not to be disclosed to any person other than those to whom they are given by Amphenol Corp. The furnishing of these drawings, specifications, or other data by Amphenol Corp., or to any other person to anyone for any purpose is not to be regarded by implication or otherwise in any manner licensing, granting rights or permitting such holder or any other person to manufacture, use or sell any product, process or design, patented or otherwise, that may in any way be related to or disclosed by said drawings, specifications, or other data.

MATERIAL

REFERENCE
NORTEL CPC A0602206

EAR# 1045
GEN# 31-71016-rfxb_assy.asm

DRAWN: C. McGRATH	DATE: 7/10/03	
ENGINEER: B.C. GLEISSNER	DATE: 7/10/03	
APPROVED: O. BARTHELMES	DATE: 7/17/03	
CAD FILE: I:\BNC\31-40706		

TITLE
BNC BULKHEAD CRIMP JACK (FOR RG-316/U, 174/U, 188A/U CABLE)

Amphenol
Amphenol Corporation
Communication and Network Products Division
Danbury, CT U.S.A. 06810

SCALE: 4.0:1 | SHEET 2 OF 2

CODE ID	DWG SIZE	DRAWING NO.	REV
74868	B	31-40706	A