MICRO SWITCH
a Honeywell Division
FED. MFG. CODE 91929

LEVER - SWITCH ACTUATING

CATALOG LISTING
LSQZ55C259

THIS DRAWING COVERS A PROPRIETARY ITEM AND IS THE PROPERTY OF MICRO SWITCH. A DIVISION OF HONEYWELL. THIS DRAWING IS NOT TO BE COPIED OR USED WITHOUT THE APPROVAL OF MICRO SWITCH

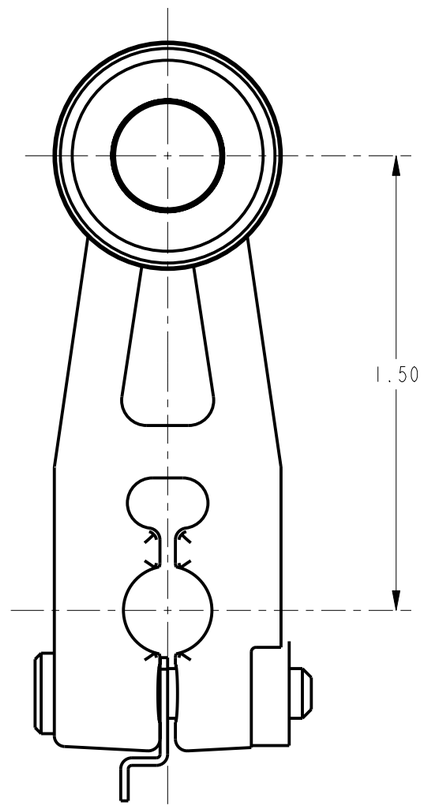

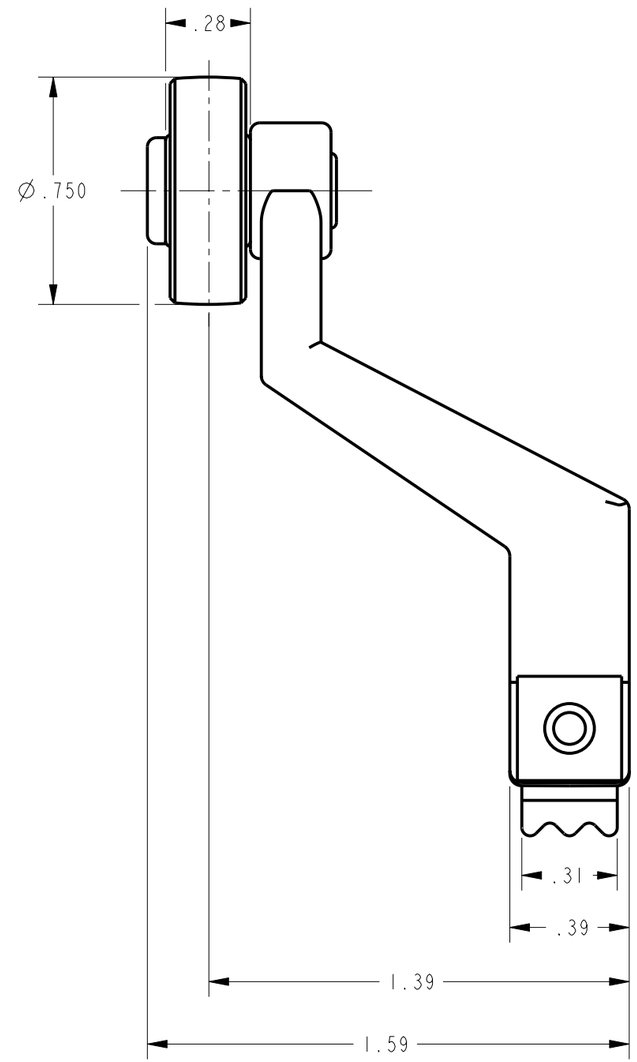

THIRD ANGLE PROJECTION

SCALE 2:1

DO NOT SCALE PRINT

UNLESS OTHERWISE SPECIFIED TOLERANCES ARE

ONE PLACE	(.0)	±.030
TWO PLACE	(.00)	±.015
THREE PLACE	(.000)	±.005
ANGLES		±

WEIGHT

ANSI Y14.5M-1982 APPLIES

LSQZ55C259
CATALOG LISTING
PAGE 1 OF 1
ISSUE 2
RELEASE NO. CO-83732
REPLACES

DRAWN	SAV	18 FEB 97
CHECK	SAV	18 FEB 97
CHECK	SAV	18 FEB 97
CHECK		

PTC/CAD 3D

REVISIONS

A	202322 DCS 7 FEB 01

Mouser Electronics

Authorized Distributor

Click to View Pricing, Inventory, Delivery & Lifecycle Information:

Honeywell:
LSQZ55C259