samtec

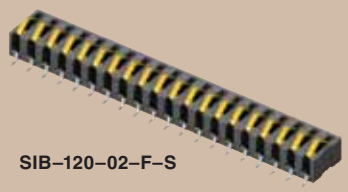

SIB–120–02–F–S

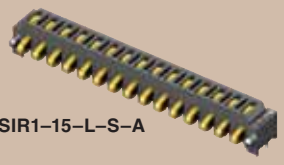

SIR1–15–L–S–A

(2,54 mm) .100"

SIB, SIR1 SERIES

ONE PIECE INTERFACES

SPECIFICATIONS

For complete specifications and recommended PCB layouts see www.samtec.com?SIB

Insulator Material:
Black Liquid Crystal Polymer
Contact Material:
Phosphor Bronze
Plating:
Au or Sn over
50µ" (1,27 µm) Ni
Current Rating:
2.6 A per pin
(1 pin powered per row)
Operating Temp Range:
-55°C to +125°C
Normal Force:
111 grams (1,09 N) per contact
RoHS Compliant: Yes

Processing:

Lead-Free Solderable: Yes
SMT Lead Coplanarity:
(0,10 mm) .004" max (02-19)
(0,15 mm) .005" max (20-30)

RECOGNITIONS

For complete scope of recognitions see www.samtec.com/quality

FILE NO. E111594

SIB – 1 – NO. OF POSITIONS – 02 – PLATING OPTION – S – OPTION

02 thru 30
(Per Row)

–F
= Gold flash on contact, Matte Tin on tail

–LC
= Locking Clip (Manual placement required)

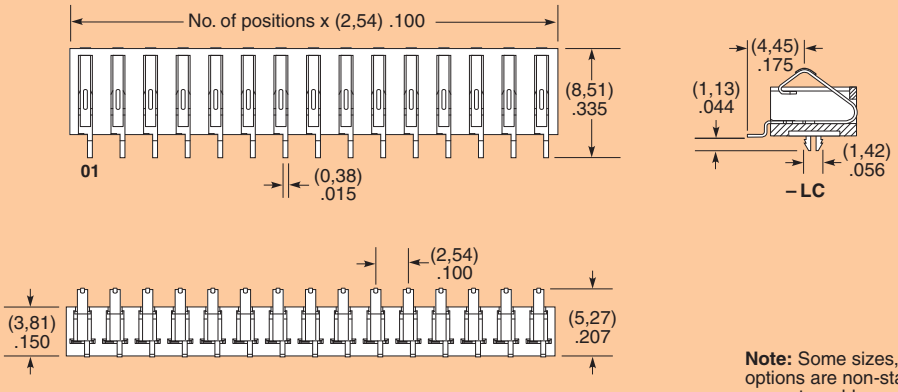

Note: Some sizes, styles and options are non-standard, non-returnable.

SPECIFICATIONS

For complete specifications and recommended PCB layouts see www.samtec.com?SIR1

Insulator Material:
Black LCP
Contact Material:
Phosphor Bronze
Plating:
Au or Sn over
50µ" (1,27 µm) Ni
Current Rating:
2.8 A per pin
(1 pin powered per row)
Weld Tab:
Phosphor Bronze
RoHS Compliant:
Yes

Processing:

Lead-Free Solderable:
Yes
SMT Lead Coplanarity:
(0,10 mm) .004" max

RECOGNITIONS

For complete scope of recognitions see www.samtec.com/quality

FILE NO. E111594

SIR1 – NO. OF POSITIONS – PLATING OPTION – S – OPTION

–03, –05, –10, –15
(Per Row)

–L
= 10µ" (0,25 µm) Gold on contact, Matte Tin on tail

–S
= 30µ" (0,76 µm) Gold on contact, Matte Tin on tail

–A
= Alignment Pin

–K
= (4,00 mm) .157" DIA Polyimide Film Pick & Place Pad

–TR
= Tape & Reel

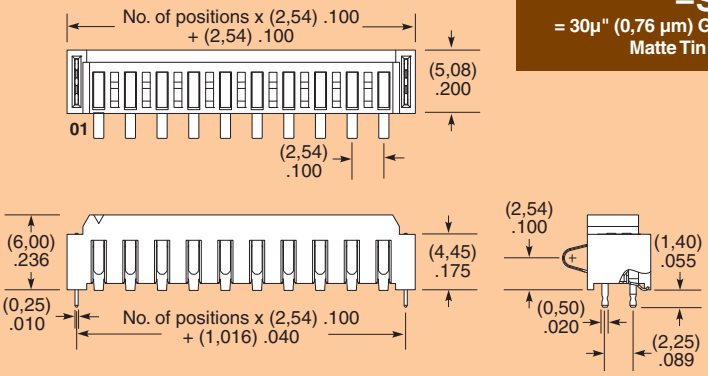

Note: Some sizes, styles and options are non-standard, non-returnable.

Due to technical progress, all designs, specifications and components are subject to change without notice.

SAMTEC USA • Tel: +1-800-SAMTEC-9 or +1-812-944-6733 **SAMTEC NORTHERN CALIFORNIA** • Tel: +1-408-395-5900 **SAMTEC SOUTHERN CALIFORNIA** • Tel: +1-800-726-8329
SAMTEC SOUTH AMERICA • Tel: +55 31 3786 3227 **SAMTEC UNITED KINGDOM** • Tel: +44 01236 739292 **SAMTEC GERMANY** • Tel: +49 (0) 89 / 89460-0
SAMTEC FRANCE • Tel: +33 1 60 95 06 60 **SAMTEC ITALY** • Tel: +39 039 6890337 **SAMTEC NORDIC/BALTIC** • Tel: +46 8 4477280 **SAMTEC BENELUX** • Tel: +44 01236 739292
SAMTEC ISRAEL • Tel: +972 3 7526600 **SAMTEC INDIA** • Tel: +91 80 3272 1612 **SAMTEC ANZ** • Tel: +613 9580 0683 **SAMTEC SINGAPORE** • Tel: +65 6745 5955 **SAMTEC JAPAN** • Tel: +81 45 475 1385
SAMTEC SHANGHAI • Tel: +86 21 6083 3766 **SAMTEC SHENZHEN** • Tel: +86 755 83776780 **SAMTEC TAIWAN** • Tel: +886 2 2735 6109 **SAMTEC HONG KONG** • Tel: +852 26904858 **SAMTEC KOREA** • Tel: +82 31 717 5685