THIS DRAWING IS UNPUBLISHED. RELEASED FOR PUBLICATION -,- .
© COPYRIGHT 2011 By - ALL RIGHTS RESERVED.

LOC	DIST
—	—

REVISIONS

P	LTR	DESCRIPTION	DATE	DWN	APVD
	B	REVISED PER ECO-14-001517	31JAN2014	AP	RP

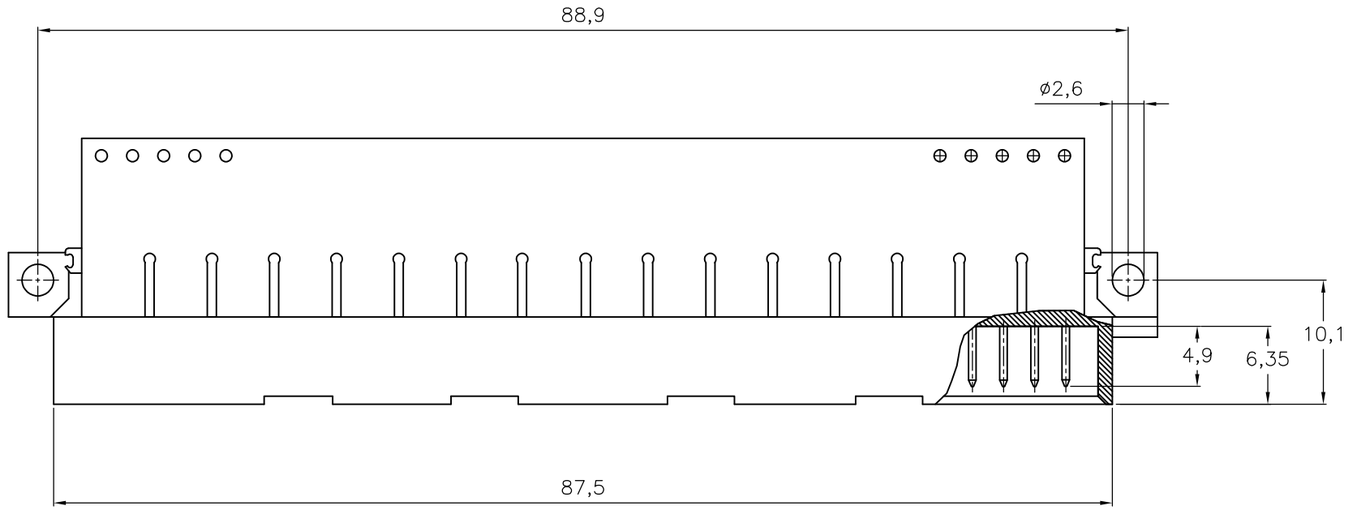

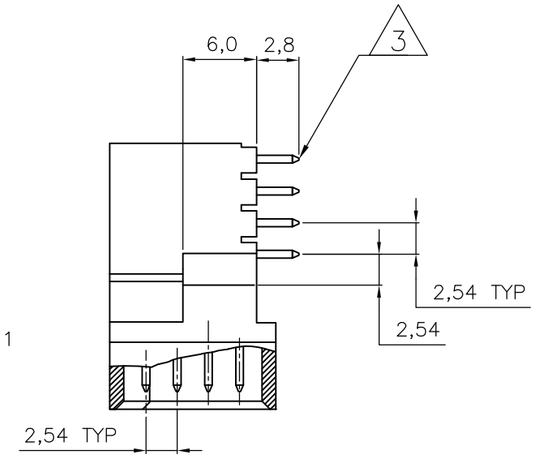

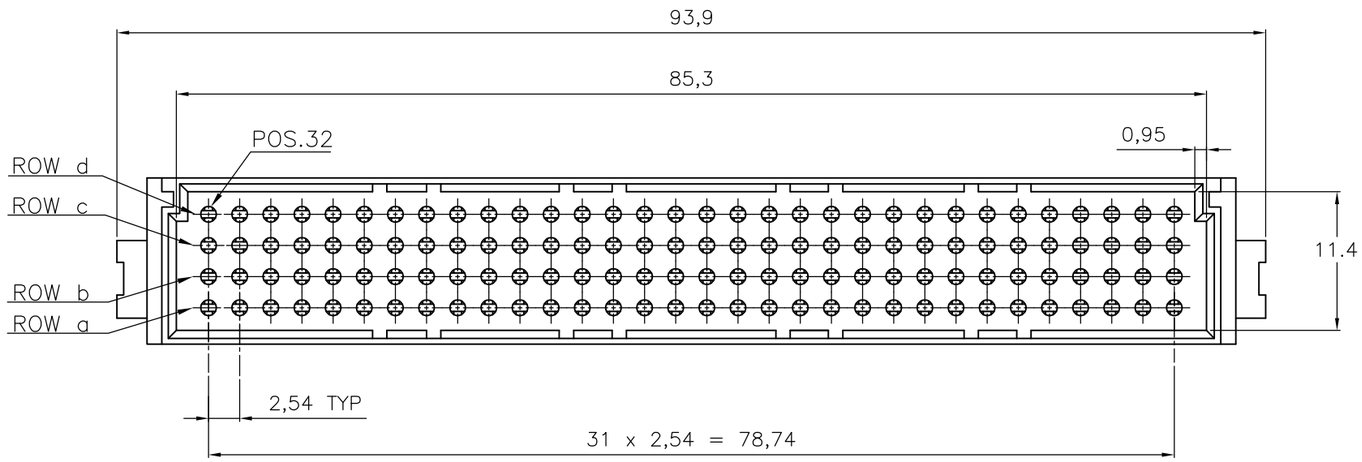

1. MATERIAL:
   - HOUSING: THERMOPL. POLYESTER
     COLOUR : GREY
   - CONTACTS: BRASS

2. PLATING CONTACT:
   PLATING AT INTERFACE TO MEET CLASS II PERFORMANCE CRITERIA OF DIN 41612 SPECIFICATION
   Sn OVER 1.25µm Ni AT PCB INTERFACE

3. SOLDERPOSTS SUITABLE FOR P.C.B HOLES
   0,8 ±0,05 OR 1,0±0,1 DIA.

ROW	32	31	30	29	28	27	26	25	24	23	22	21	20	19	18	17	16	15	14	13	12	11	10	9	8	7	6	5	4	3	2	1
d	X	X	X	X	X	X	X	X	X	X	X	X	X	X	X	X	X	X	X	X	X	X	X	X	X	X	X	X	X	X	X	X
c	X	X	X	X	X	X	X	X	X	X	X	X	X	X	X	X	X	X	X	X	X	X	X	X	X	X	X	X	X	X	X	X
b	X	X	X	X	X	X	X	X	X	X	X	X	X	X	X	X	X	X	X	X	X	X	X	X	X	X	X	X	X	X	X	X
a	X	X	X	X	X	X	X	X	X	X	X	X	X	X	X	X	X	X	X	X	X	X	X	X	X	X	X	X	X	X	X	X

AN ASTERISK ,,X'' DENOTES A CONTACT.

SEE NOTE 2	SEE NOTE 1	106739-4
FINISH	MATERIAL	PART NUMBER

THIS DRAWING IS A CONTROLLED DOCUMENT.

DIMENSIONS: mm

TOLERANCES UNLESS OTHERWISE SPECIFIED:
0 PLC ± -
1 PLC ± -
2 PLC ± -
3 PLC ± -
4 PLC ± -
ANGLES ± -

MATERIAL -

FINISH -

DWN 30NOV2011 R.v.L/Grzybowski
CHK -
APVD 18NOV00 R.FIJTEN
PRODUCT SPEC —
APPLICATION SPEC —
WEIGHT —

TE Connectivity

NAME
128 POSITION C MALE
SOLDER CONNECTOR
-

SIZE	CAGE CODE	DRAWING NO	RESTRICTED TO
A3	00779	C-106739	—

CUSTOMER DRAWING

SCALE	SHEET	REV
NTS	1 OF 1	B