SIGN	DATE	DESCRIPTION	APPROVER
		Standard spec is changed	
		THIS IS CAD DRAWING, DO NOT REVISE MANUALLY!!!	

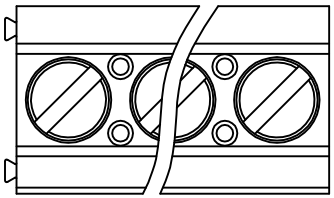

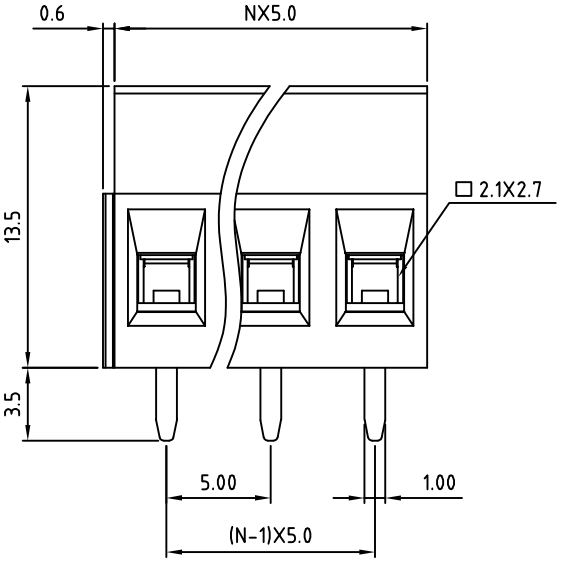

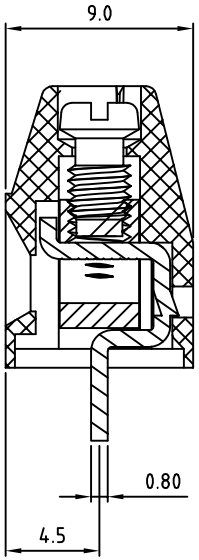

N=Number of contacts

P.C.B LAYOUT

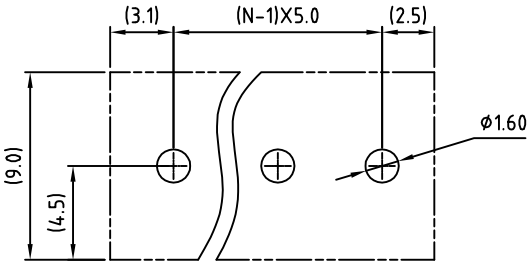

Material

- Terminal body
- (metal housing): Brass(CuZn)
- Terminal screw: Steel Zinc plating "-" slot type
- Contacts: Brass
- Surface of solder tail: Tin plated
- Insulator (housing): Thermoplastic (UL94V-0)

Electrical cULus/ FIMKO

- Voltage rating: 300VAC / 300VAC
- Current rating: 16A / 17.5A
- Wire range: 0.5-1.5mm^2
- Solid wire(AWG): 12-28
- Stranded wire(AWG): 12-28
- Torque: 3.5Lb-In / 0.4N.m
- Screw: M3
- Wire strip length: 6-7mm
- Withstanding Voltage: 1.6KV / 2.5KV
- Operating temperature: -30°C to +105°C
- Soldering temperature: 250°C±10°C/5 Sec
- Safety Approval: c UL us FI

RoHS Compliant

PART NUMBER:

OSTVIXX0152

No. of Poles		COLOR
02	2 Poles	0: Black
03	3 Poles	5: Green (Standard)
...	...	6: Blue
24	24 Poles	8: Grey

THESE DRAWINGS AND SPECIFICATIONS ARE THE PROPERTY OF ON-SHORE TECHNOLOGY, INC. AND SHALL NOT BE REPRODUCED, COPIED OR USED IN ANY MANNER WITHOUT THE PRIOR WRITTEN CONSENT OF ON-SHORE TECHNOLOGY, INC.

ON-SHORE TECHNOLOGY, INC.

TITLE	OSTVI 5.0 Series 180° wire inlet (without cover)				
PART NO.	OSTVIXX0152			DWG NO.	OSTVIXX0152.DWG
APPROVED	CHECKED	DESIGNED	DRAWN	CUST NO.	
Shi Jun 2006.10.20	Marvin 2006.10.20	Marvin 2006.10.20	Marvin 2006.10.20	UNIT: mm / SCALE: NONE / SHEET: 01/01 / REV.: E	

Tolerance	
X.	±0.50
X.X	±0.30
X.XX	±0.10
X°	±1°