EAO – Your Expert Partner for
Human Machine Interfaces

EAO Product Information

Series 61

eao

Contents

Description 3

Product Assembly 4

Mounting instruction 9

Devices raised mounting 11

Devices flush mounting 19

Accessories 25

Technical Data 43

Typical Applications 47

Application guidelines 49

Marking 50

Drawings 53

Index 70

Product Information

General notes
The indicators, illuminated pushbuttons, selector-, keylock switches or emergency-stop switches with spray-water protection at the front (IP 65) are modular and consist of an actuator and switching element.
In addition to the standard switching elements (gold-plated silver contact or silver contact with universal soldering terminals), forced-opening, slow-make switching elements with gold or silver contacts with soldering terminals are available. EAO can also offer screw terminals on its slow make elements. Switching elements with soldering terminals can also be fitted with flat receptacle 2.8 x 0.5 mm.
The front dimensions of the units in this series are 24 x 24 mm, 24 mm dia., 18 x 24 mm, 18 x 18 mm or 18 mm dia. For flush mounting the dimensions 25 mm dia., 24 x 30 mm or 24 x 24 mm can be supplied.

Mounting
All switch actuators are mounted from the front by pushing them through the mounting hole in the front panel. They are then fixed from the back with a fixing nut and the mounting tool Typ-Nr. 01-907. Max. tightening torque 50 Ncm.
The preassembled switching element with the connecting wires in a single plane can be clipped on afterwards. A range of assembly and service tools are available.
PCB mounting adaptors are available for universal solder terminal switching elements.
All raised profile actuators are provided with an anti-twist device.

Lenses
The flat or concave lenses are available in various colours and a transparent or translucent version. The lens surface is non-reflecting (mat). Round lenses for devices 24 mm dia. or 25 mm dia. can also be supplied in aluminium.
Anodized aluminium parts can have visible variations due production-technical reasons.

Marking
For further information about engraving, hot stamping and film inserts see part Marking.

Illumination
T1 $^3/_4$ midget groove LED's in red, blue, green, yellow and white or filament lamps give superb illumination and can be supplied in 6, 12, 24, or 48 V.
Luminosity and wave length scattering caused by the technology used in the LED manufacturing processes may lead to visual differences in our products.

Position indication
The status of a maintained action switch can be determinded by the position of the lens.

Keylock switch
Standard lock (Index D). Standard lock number is 311. If the lock number is not specified, we will supply standard number 311.
An additional 134 special locks (Index X) are available on request.
Master keys for lock numbers 311 ... 445 may be ordered by quoting Typ-Nr. 31-989.300. Two keys are supplied with each keylock switch.
Spare keys (Index D) for standard locks may be ordered by quoting Typ-Nr. 31-989.xxx (please state the lock number).

Emergency-stop pushbutton, foolproof with key to release
KABA safety lock. Standard lock number is 1001. Other lock numbers are available on request. Spare keys for KABA safety lock may be ordered under Typ-Nr. 14-987.xxx (please state the lock number).

Specimen order

Indicator :

- Indicator complete, flush mounting, 24 x 24 mm	61-0000.02

Essential accessories :

- Lens plastic colourless transparent flush, 24 x 24 mm	61-9671.7
- Single-LED T1 $^3/_4$ MG, 24 VAC/DC, white diffuse	10-2J12.1069
- Front bezel set for Indicator, flush mounting, plastic black, 24 x 24 mm	61-9930.0

We reserve the right to modify technical data
All dimensions in mm

Pushbutton illuminative, raised mounting

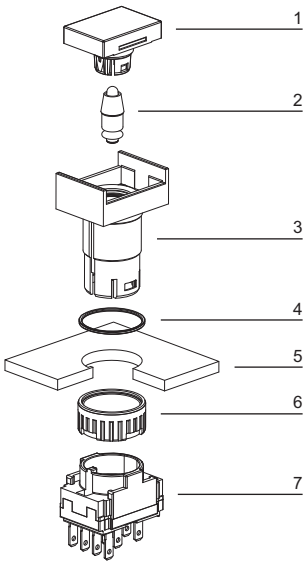

1 Lens
2 LED
3 Actuator housing
4 Sealing
5 Front plate
6 Fixing nut
7 Switching element

Emergency-stop pushbutton

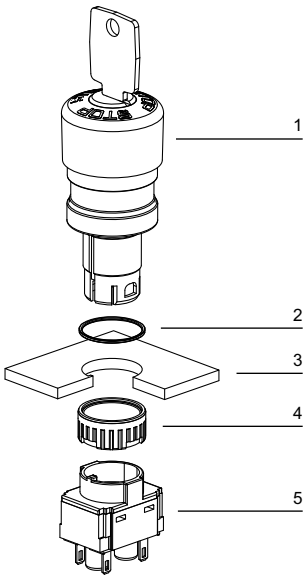

1 Emergency-stop pushbutton actuator
2 Sealing
3 Front plate
4 Fixing nut
5 Switching element

Mushroom-head pushbutton, raised mounting

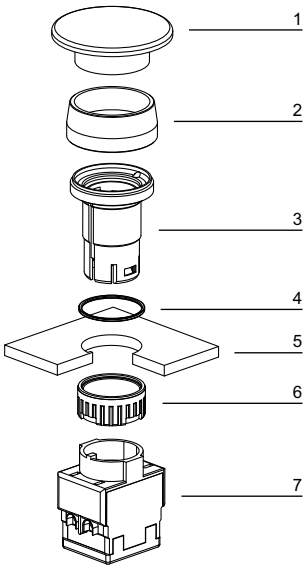

1 Mushroom-head cap
2 Front ring
3 Actuator housing
4 Sealing
5 Front plate
6 Fixing nut
7 Switching element

Keylock switch, raised mounting

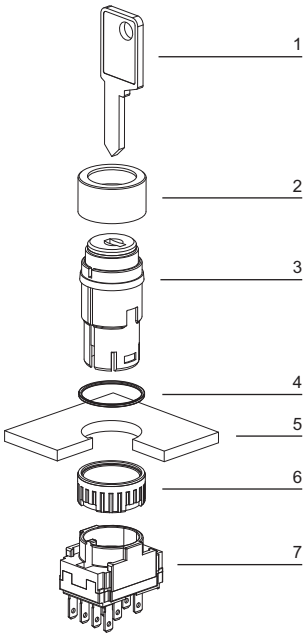

1 Key
2 Keylock front bezel
3 Keylock switch actuator
4 Sealing
5 Front plate
6 Fixing nut
7 Switching element

Selector switch illuminative, raised mounting

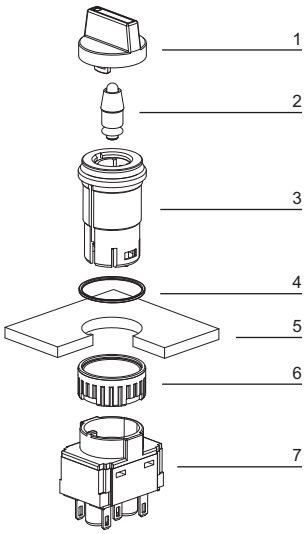

1 Lever
2 LED
3 Selector switch actuator
4 Sealing
5 Front plate
6 Fixing nut
7 Switching element

Pushbutton illuminative, flush mounting

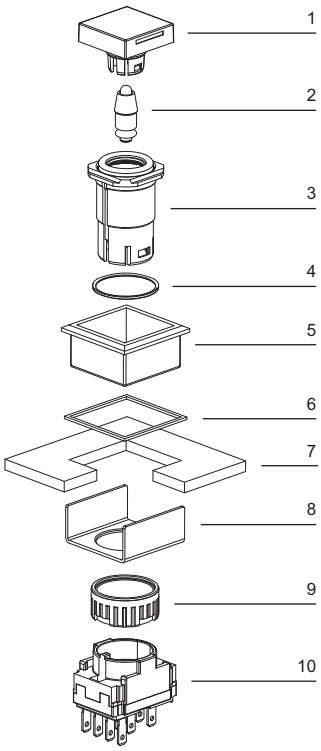

1 Lens
2 LED
3 Actuator housing
4 Sealing
5 Front bezel
6 Sealing
7 Front panel
8 Fixing bracket
9 Fixing nut
10 Switching element

Keylock switch, flush mounting

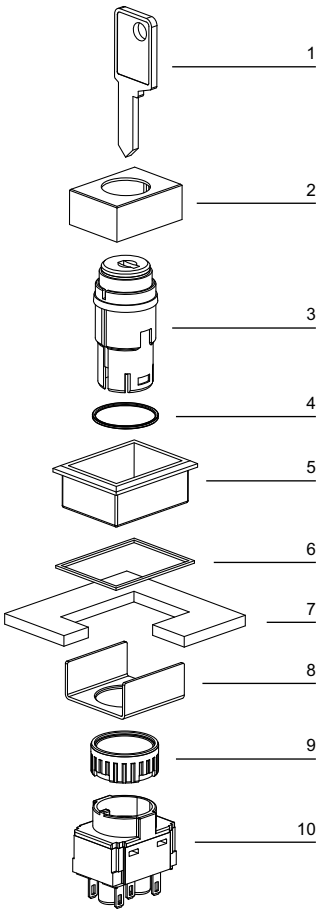

1 Key
2 Keylock front bezel
3 Keylock switch actuator
4 Sealing
5 Front bezel
6 Sealing
7 Front plate
8 Fixing bracket
9 Fixing nut
10 Switching element

Selector switch illuminative, flush mounting

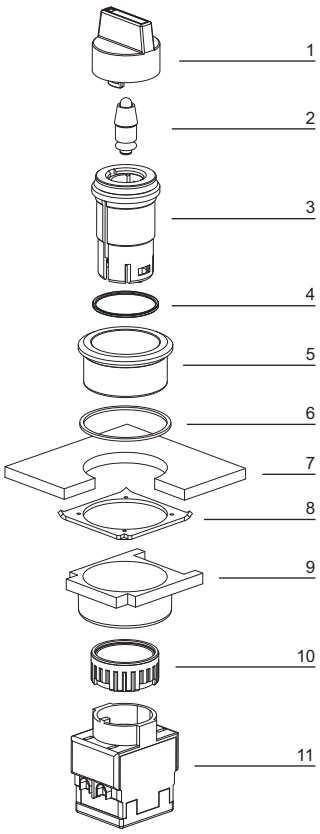

1 Lever
2 LED
3 Selector switch actuator
4 Sealing
5 Front bezel
6 Sealing
7 Front plate
8 Anti-twist ring
9 Thrust piece
10 Fixing nut
11 Switching element

Tool set

Lens remover, Mounting tool, Dismantling tool with Lamp- and LED remover are part of the Tool set K61-999.100

raised mounting

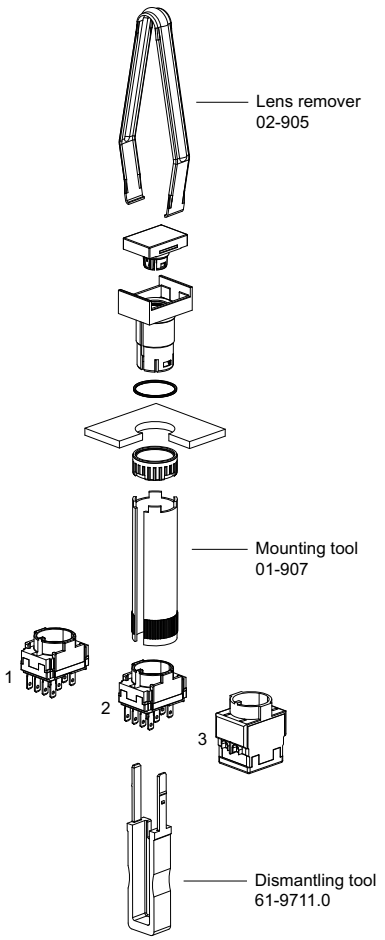

flush mounting

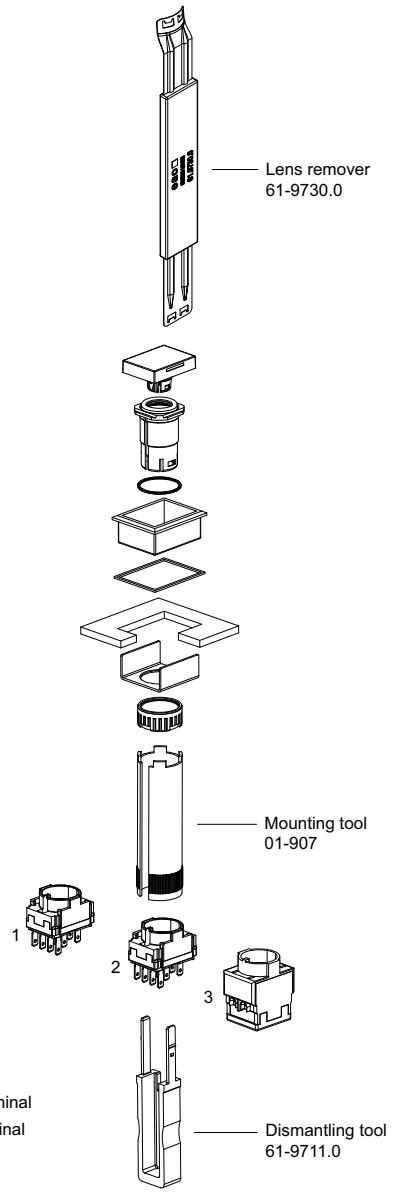

1 Snap-action switching element with soldering terminal
2 Slow-make switching element with soldering terminal
3 Slow-make switching element with screw terminal

Conversion from momentary to maintained action

Conversion is not reversible !

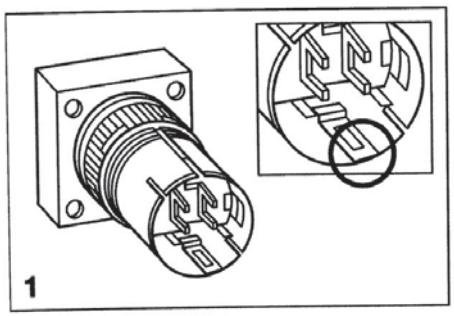

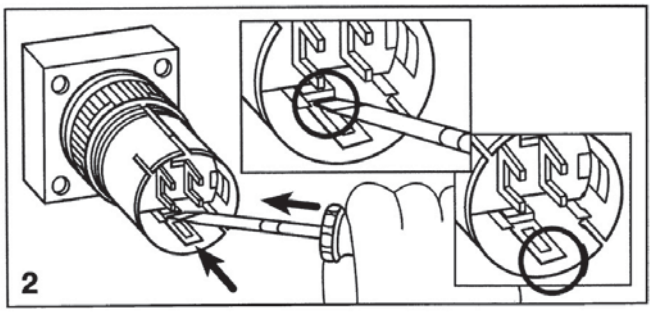

1 Momentary action

2 Maintained action

push carefully the metallic part with a screwdriver till the end of its travel.

Indicator complete

Essential Accessories:

- Front ring, raised mounting page 31
- Lens plastic, raised mounting page 25
- Single-LED page 39

	Front protection	Terminals	⧈ 24 x 24 mm Typ-Nr.	⧈ 18 x 18 mm Typ-Nr.	⧈ 18 x 24 mm Typ-Nr.	Ø 24 mm Typ-Nr.	Ø 18 mm Typ-Nr.	Mounting dimensions	Technical drawing	Circuit drawing	kg
Indicator complete Actuator housing black	IP 65	S1	**61-0050.02**	**61-0020.02**	**61-0030.02**	**61-0040.02**	**61-0010.02**	3	3	4	0.005

Front ring required only for actuator Ø 24 mm
Terminals: S1 = Soldering terminal (also pluggable 2.8 x 0.5 mm)
Mounting dimensions from page 58, Technical drawing from page 59, Circuit drawing from page 66

Indicator actuator

Essential Accessories:

- Front ring, raised mounting page 31
- Lamp element page 33
- Lens plastic, raised mounting page 25
- Single-LED page 39

	Front protection	⧈ 24 x 24 mm Typ-Nr.	⧈ 18 x 18 mm Typ-Nr.	⧈ 18 x 24 mm Typ-Nr.	Ø 24 mm Typ-Nr.	Ø 18 mm Typ-Nr.	Mounting dimensions	Technical drawing	Circuit drawing	kg
Indicator actuator Actuator housing black	IP 65	**61-0059.0**	**61-0029.0**	**61-0039.0**	**61-0049.0**	**61-0019.0**	3	14	4	0.005

Front ring required only for actuator Ø 24 mm
Mounting dimensions from page 58, Technical drawing from page 59, Circuit drawing from page 66

Illuminated pushbutton actuator

Essential Accessories:

- Front ring, raised mounting page 31
- Lens plastic, raised mounting page 25
- Single-LED page 39
- Switching element for Pushbutton | Keylock- and Selector switch 2 positions page 35

	Front protection	Switching action	◻ 24 x 24 mm Typ-Nr.	◻ 18 x 18 mm Typ-Nr.	◻ 18 x 24 mm Typ-Nr.	Ø 24 mm Typ-Nr.	Ø 18 mm Typ-Nr.	Mounting dimensions	Technical drawing	Circuit drawing	
Illuminated pushbutton actuator Actuator housing black	IP 65	MA	**61-1250.0**	**61-1220.0**	**61-1230.0**	**61-1240.0**	**61-1210.0**	3	16	6	0.005
		M	**61-1150.0**	**61-1120.0**	**61-1130.0**	**61-1140.0**	**61-1110.0**	3	16	13	0.005
		M-MA	**61-1350.0**	**61-1320.0**	**61-1330.0**		**61-1310.0**	3	16	13	0.005

Front ring required only for actuator Ø 24 mm
M-MA convertible from Momentary to Maintained action
Switching action: MA = Maintained action, M = Momentary action, M-MA = Momentary action-Maintained action
Mounting dimensions from page 58, Technical drawing from page 59, Circuit drawing from page 66

Emergency-stop pushbutton actuator, foolproof EN IEC 60947-5-5

Application as per DIN EN ISO 13850 and EN 60204-1

Essential Accessories:

Switching element for Emergency-stop pushbutton, foolproof EN IEC 60947-5-5 page 36

	Front protection	Switching action	Mushroom had cap	Marking	Ø 27 mm Typ-Nr.	Mounting dimensions	Technical drawing	Circuit drawing	kg
Emergency-stop pushbutton actuator, foolproof EN IEC 60947-5-5 Position indication ring black Key to unlock clockwise Standard lock 1001	IP 65	MA	Plastic red	Stop	**61-5441.4/K**	1	19	5	0.033
Position indication ring black Twist to unlock clockwise	IP 65	MA	Plastic red	Arrows	**61-3440.4/1**	1	19	5	0.020
				Stop + Arrows	**61-3440.4/2**	1	19	5	0.020
Position indication ring black Twist to unlock clockwise with adaptor for mosaic	IP 65	MA	Plastic red	Arrows	**61-3440.4/1S**	1	19	5	0.021
Position indication ring black Twist to unlock clockwise with metal Fixing nut	IP 65	MA	Plastic red	Arrows	**61-3440.4/D**	1	19	5	0.020
Position indication ring green Twist to unlock clockwise	IP 65	MA	Plastic red	Arrows	**61-3440.4/5**	1	19	5	0.020

Other lock numbers on request
Switching action: MA = Maintained action
Mounting dimensions from page 58, Technical drawing from page 59, Circuit drawing from page 66

Stop pushbutton actuator, foolproof

Essential Accessories:

- Switching element for Emergency-stop pushbutton, foolproof EN IEC 60947-5-5 page 36
- Switching element for Stop pushbutton, foolproof page 37

	Front protection	Switching action	Mushroom had cap	Marking	Ø 27 mm Typ-Nr.	Mounting dimensions	Technical drawing	Circuit drawing	kg
Stop pushbutton actuator, foolproof Position indication ring black Key to unlock clockwise Standard lock 1001	IP 65	MA	Plastic black	without	**61-5441.0/KA**	1	19	5	0.033
Position indication ring black Twist to unlock clockwise	IP 65	MA	Plastic grey	Arrows	**61-3440.4/8**	1	19	5	0.020

Other lock numbers on request
Switching action: MA = Maintained action
Mounting dimensions from page 58, Technical drawing from page 59, Circuit drawing from page 66

Mushroom-head pushbutton actuator

Essential Accessories:

- Front ring, raised mounting page 31
- Mushroom-head cap page 27
- Switching element for Pushbutton | Keylock- and Selector switch 2 positions page 35

	Front protection	Switching action	Ø 32 mm Typ-Nr.	Mounting dimensions	Technical drawing	Circuit drawing	kg
Mushroom-head pushbutton actuator Actuator housing black	IP 65	MA	**61-1240.0**	1	15	2	0.005
		M	**61-1140.0**	1	15	3	0.005

Switching action: MA = Maintained action, M = Momentary action
Mounting dimensions from page 58, Technical drawing from page 59, Circuit drawing from page 66

Keylock switch actuator 2 positions

if mounted with anti-twist device, the lug is on the left side
Actuators usable for front dimensions: ◻ 24 x 24 mm | ◻ 18 x 18 mm | ◻ 18 x 24 mm | 24 mm dia. | 18 mm dia.

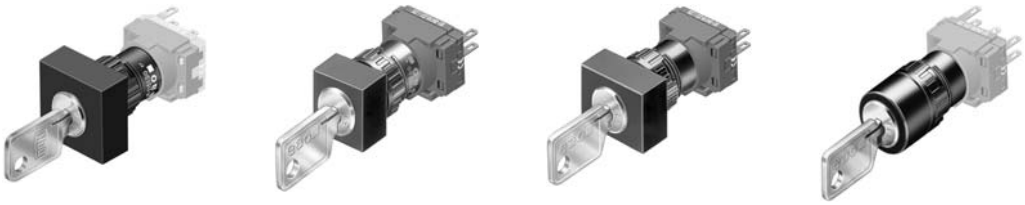

Essential Accessories:

- Anti-twist ring page 41
- Keylock front bezel for keylock switch, raised mounting page 27
- Switching element for Pushbutton | Keylock- and Selector switch 2 positions page 35

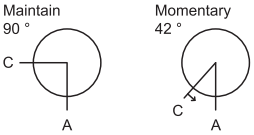

	Front protection	Switching action	Key remove	Typ-Nr.	Mounting dimensions	Technical drawing	Circuit drawing	kg
Keylock switch actuator 2 positions	IP 65	MA	A	**61-2201.0/D**	3	17	17	0.065
Position A: Basic position			C	**61-2203.0/D**	3	17	17	0.065
Position C: Maintained action Standard lock 311			C + A	**61-2205.0/D**	3	17	17	0.065
Position A: Basic position Position C: Momentary action Standard lock 311	IP 65	M	A	**61-2101.0/D**	3	17	16	0.065

Other lock numbers on request
Anti-twist ring (not needed by using anti-twist device)
Switching action: MA = Maintained action, M = Momentary action
Mounting dimensions from page 58, Technical drawing from page 59, Circuit drawing from page 66

Keylock switch actuator 3 positions

if mounted with anti-twist device, the lug is on the left side
Actuators usable for front dimensions: ⌑ 24 x 24 mm | ⌑ 18 x 18 mm | ⌑ 18 x 24 mm | 24 mm dia. | 18 mm dia.

Essential Accessories:

- Anti-twist ring page 41
- Keylock front bezel for keylock switch, raised mounting page 27
- Switching element for Keylock- and Selector switch 3 positions page 36

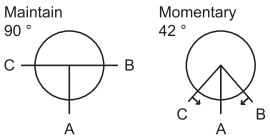

	Front protection	Switching action	Key remove	Typ-Nr.	Mounting dimensions	Technical drawing	Circuit drawing	kg
Keylock switch actuator 3 positions Pos. C: Maintained action Pos. A: Basic position Pos. B: Maintained action Standard lock 311	IP 65	MA-0-MA	A	**61-2601.0/D**	3	17	19	0.065
			A + B	**61-2604.0/D**	3	17	19	0.065
			B	**61-2602.0/D**	3	17	19	0.065
			C	**61-2603.0/D**	3	17	19	0.065
			C + A	**61-2605.0/D**	3	17	19	0.065
			C + A + B	**61-2607.0/D**	3	17	19	0.065
			C + B	**61-2606.0/D**	3	17	19	0.065
Pos. C: Maintained action Pos. A: Basic position Pos. B: Momentary action Standard lock 311	IP 65	MA-0-M	A	**61-2701.0/D**	3	17	18	0.065
			C	**61-2703.0/D**	3	17	18	0.065
			C + A	**61-2705.0/D**	3	17	18	0.065
Pos. C: Momentary action Pos. A: Basic position Pos. B: Maintained action Standard lock 311	IP 65	M-0-MA	A + B	**61-2804.0/D**	3	17	15	0.065
			B	**61-2802.0/D**	3	17	15	0.065
Pos. C: Momentary action Pos. A: Basic position Pos. B: Maintained action Standard lock 311	IP 65	M-0-MA	A	**61-2801.0/D**	3	17	15	0.065
Pos. C: Momentary action Pos. A: Basic position Pos. B: Momentary action Standard lock 311	IP 65	M-0-M	A	**61-2501.0/D**	3	17	14	0.065

Anti-twist ring (not needed by using anti-twist device)
Other lock numbers on request
Switching action: MA = Maintained action, M = Momentary action
Mounting dimensions from page 58, Technical drawing from page 59, Circuit drawing from page 66

Selector switch actuator 2 positions

illuminative
if mounted with anti-twist device, the lug is on the left side
Actuators usable for front dimensions: ⌑ 26 x 26 mm | ⌑ 24 x 24 mm | 18 mm dia.

Essential Accessories:

- Anti-twist ring page 41
- Front bezel square for selector switch, raised mounting page 29
- Lever, raised mounting page 28
- Single-LED page 39
- Switching element for Pushbutton | Keylock- and Selector switch 2 positions page 35

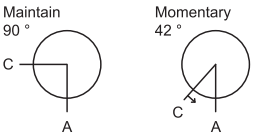

	Front protection	Switching action	Typ-Nr.	Mounting dimensions	Technical drawing	Circuit drawing	kg
Selector switch actuator 2 positions Position C: Maintained action Position A: Basic position	IP 65	MA	**61-4210.0**	3	18	8	0.006
Position C: Momentary action Position A: Basic position	IP 65	M	**61-4110.0**	3	18	7	0.006

Anti-twist ring (not needed by using anti-twist device)
Frontbezel only necessarily for front dimensions 26 x 26 mm and 24 x 24 mm
Switching action: MA = Maintained action, M = Momentary action
Mounting dimensions from page 58, Technical drawing from page 59, Circuit drawing from page 66

Selector switch actuator 3 positions

illuminative
if mounted with anti-twist device, the lug is on the left side
Actuators usable for front dimensions: ⧄ 26 x 26 mm | ⧄ 24 x 24 mm | 18 mm dia.

Essential Accessories:

- Anti-twist ring page 41
- Front bezel square for selector switch, raised mounting page 29
- Lever, raised mounting page 28
- Single-LED page 39
- Switching element for Keylock- and Selector switch 3 positions page 36

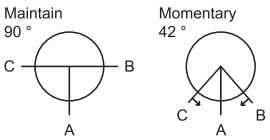

	Front protection	Switching action	Typ-Nr.	Mounting dimensions	Technical drawing	Circuit drawing	kg
Selector switch actuator 3 positions Position C: Maintained action Position A: Basic position Position B: Maintained action	IP 65	MA-0-MA	**61-4610.0**	3	18	12	0.006
Position C: Maintained action Position A: Basic position Position B: Momentary action	IP 65	MA-0-M	**61-4710.0**	3	18	11	0.006
Position C: Momentary action Position A: Basic position Position B: Maintained action	IP 65	M-0-MA	**61-4810.0**	3	18	10	0.006
Position C: Momentary action Position A: Basic position Position B: Momentary action	IP 65	M-0-M	**61-4510.0**	3	18	9	0.006

Anti-twist ring (not needed by using anti-twist device)
Frontbezel only necessarily for front dimensions 26 x 26 mm and 24 x 24 mm
Switching action: MA = Maintained action, M = Momentary action
Mounting dimensions from page 58, Technical drawing from page 59, Circuit drawing from page 66

Indicator complete, flush mounting

Actuators usable for front dimensions: ⌑ 24 x 24 mm | ⌔ 24 x 30 mm | 25 mm dia.

Essential Accessories:

- Front bezel set for Indicators and Illuminated pushbutton, flush mounting page 29
- Lens plastic, flush mounting page 25
- Single-LED page 39

	Front protection	Terminals	Typ-Nr.	Mounting dimensions	Technical drawing	Circuit drawing	kg
Indicator complete, flush mounting	IP 65	S1	**61-0000.02**	4	4	4	0.006

Terminals: S1 = Soldering terminal (also pluggable 2.8 x 0.5 mm)
Mounting dimensions from page 58, Technical drawing from page 59, Circuit drawing from page 66

Indicator actuator, flush mounting

Actuators usable for front dimensions: ⌑ 24 x 24 mm | ⌔ 24 x 30 mm | 25 mm dia.

Essential Accessories:

- Front bezel set for Indicators and Illuminated pushbutton, flush mounting page 29
- Lamp element page 33
- Lens plastic, flush mounting page 25
- Single-LED page 39

	Front protection	Typ-Nr.	Mounting dimensions	Technical drawing	Circuit drawing	kg
Indicator actuator, flush mounting	IP 65	**61-0009.0**	4	21	4	0.005

Mounting dimensions from page 58, Technical drawing from page 59, Circuit drawing from page 66

Illuminated pushbutton actuator, flush mounting

Actuators usable for front dimensions: ⌑ 24 x 24 mm | ⌑ 24 x 30 mm | 25 mm dia.

Essential Accessories:

- Front bezel set for Indicators and Illuminated pushbutton, flush mounting page 29
- Lens plastic, flush mounting page 25
- Single-LED page 39
- Switching element for Pushbutton | Keylock- and Selector switch 2 positions page 35

	Front protection	Switching action	Typ-Nr.	Mounting dimensions	Technical drawing	Circuit drawing	kg
Illuminated pushbutton actuator, flush mounting	IP 65	MA	**61-1200.0**	4	20	2	0.005
		M	**61-1100.0**	4	20	3	0.005
		M-MA	**61-1300.0**	4	20	3	0.005

M-MA convertible from Momentary to Maintained action
Switching action: MA = Maintained action, M = Momentary action, M-MA = Momentary action-Maintained action
Mounting dimensions from page 58, Technical drawing from page 59, Circuit drawing from page 66

Mushroom-head pushbutton actuator, flush mounting

Essential Accessories:

- Front bezel set for Mushroom-head pushbutton, flush mounting page 30
- Mushroom-head cap page 27
- Switching element for Pushbutton | Keylock- and Selector switch 2 positions page 35

	Front protection	Switching action	Ø 32 mm Typ-Nr.	Mounting dimensions	Technical drawing	Circuit drawing	kg
Mushroom-head pushbutton actuator, flush mounting	IP 65	MA	**61-1200.0**	2	24	2	0.005
		M	**61-1100.0**	2	24	3	0.005
		M-MA	**61-1300.0**	2	24	3	0.005

M-MA convertible from Momentary to Maintained action
Switching action: MA = Maintained action, M = Momentary action, M-MA = Momentary action-Maintained action
Mounting dimensions from page 58, Technical drawing from page 59, Circuit drawing from page 66

Keylock switch actuator 2 positions, flush mounting

Actuators usable for front dimensions: ⌑ 24 x 24 mm | ⌑ 24 x 30 mm | 25 mm dia.

Essential Accessories:

- Front bezel set for Keylock switch, flush mounting page 30
- Keylock front bezel for keylock switch, flush mounting page 27
- Switching element for Pushbutton | Keylock- and Selector switch 2 positions page 35

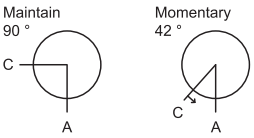

	Front protection	Switching action	Key remove	Typ-Nr.	Mounting dimensions	Technical drawing	Circuit drawing	kg
Keylock switch actuator 2 positions, flush mounting	IP 65	MA	A	**61-2201.0/D**	4	22	17	0.065
Position A: Basic position			C	**61-2203.0/D**	4	22	17	0.065
Position C: Maintained action Standard lock 311			C + A	**61-2205.0/D**	4	22	17	0.065
Position A: Basic position Position C: Momentary action Standard lock 311	IP 65	M	A	**61-2101.0/D**	4	22	16	0.065

Other lock numbers on request
Switching action: MA = Maintained action, M = Momentary action
Mounting dimensions from page 58, Technical drawing from page 59, Circuit drawing from page 66

Keylock switch actuator 3 positions, flush mounting

Actuators usable for front dimensions: 24 x 24 mm | 24 x 30 mm | 25 mm dia.

Essential Accessories:

- Front bezel set for Keylock switch, flush mounting page 30
- Keylock front bezel for keylock switch, flush mounting page 27
- Switching element for Keylock- and Selector switch 3 positions page 36

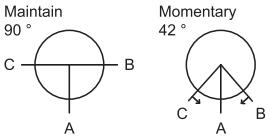

	Front protection	Switching action	Key remove	Typ-Nr.	Mounting dimensions	Technical drawing	Circuit drawing	
Keylock switch actuator 3 positions, flush mounting Pos. C: Maintained action Pos. A: Basic position Pos. B: Maintained action Standard lock 311	IP 65	MA-0-MA	A	**61-2601.0/D**	4	22	19	0.065
			A + B	**61-2604.0/D**	4	22	19	0.065
			B	**61-2602.0/D**	4	22	19	0.065
			C	**61-2603.0/D**	4	22	19	0.065
			C + A	**61-2605.0/D**	4	22	19	0.065
			C + A + B	**61-2607.0/D**	4	22	19	0.065
			C + B	**61-2606.0/D**	4	22	19	0.065
Pos. C: Maintained action Pos. A: Basic position Pos. B: Momentary action Standard lock 311	IP 65	MA-0-M	A	**61-2701.0/D**	4	22	18	0.065
			C	**61-2703.0/D**	4	22	18	0.065
			C + A	**61-2705.0/D**	4	22	18	0.065
Pos. C: Momentary action Pos. A: Basic position Pos. B: Maintained action Standard lock 311	IP 65	M-0-MA	A + B	**61-2804.0/D**	4	22	15	0.065
			B	**61-2802.0/D**	4	22	15	0.065
Pos. C: Momentary action Pos. A: Basic position Pos. B: Maintained action Standard lock 311	IP 65	M-0-MA	A	**61-2801.0/D**	4	22	15	0.065
Pos. C: Momentary action Pos. A: Basic position Pos. B: Momentary action Standard lock 311	IP 65	M-0-M	A	**61-2501.0/D**	4	22	14	0.065

Other lock numbers on request
Switching action: MA = Maintained action, M = Momentary action
Mounting dimensions from page 58, Technical drawing from page 59, Circuit drawing from page 66

Selector switch actuator 2 positions, flush mounting

illuminative

Actuators usable for front dimensions: ⌑ 24 x 24 mm | 25 mm dia.

Essential Accessories:

- Front bezel set for Selector switch, flush mounting page 31
- Lever, flush mounting page 28
- Single-LED page 39
- Switching element for Pushbutton | Keylock- and Selector switch 2 positions page 35

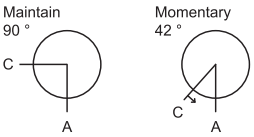

	Front protection	Switching action	Typ-Nr.	Mounting dimensions	Technical drawing	Circuit drawing	kg
Selector switch actuator 2 positions, flush mounting Position C: Maintained action Position A: Basic position	IP 65	MA	**61-4210.0**	4	23	8	0.006
Position C: Momentary action Position A: Basic position	IP 65	M	**61-4110.0**	4	23	7	0.006

Switching action: MA = Maintained action, M = Momentary action

Mounting dimensions from page 58, Technical drawing from page 59, Circuit drawing from page 66

Selector switch actuator 3 positions, flush mounting

illuminative

Actuators usable for front dimensions: ⧄ 24 x 24 mm | 25 mm dia.

Essential Accessories:

- Front bezel set for Selector switch, flush mounting page 31
- Lever, flush mounting page 28
- Single-LED page 39
- Switching element for Keylock- and Selector switch 3 positions page 36

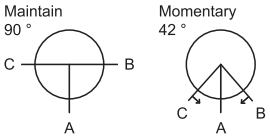

	Front protection	Switching action	Typ-Nr.	Mounting dimensions	Technical drawing	Circuit drawing	kg
Selector switch actuator 3 positions, flush mounting Position C: Maintained action Position A: Basic position Position B: Maintained action	IP 65	MA-0-MA	**61-4610.0**	4	23	12	0.006
Position C: Maintained action Position A: Basic position Position B: Momentary action	IP 65	MA-0-M	**61-4710.0**	4	23	11	0.006
Position C: Momentary action Position A: Basic position Position B: Maintained action	IP 65	M-0-MA	**61-4810.0**	4	23	10	0.006
Position C: Momentary action Position A: Basic position Position B: Momentary action	IP 65	M-0-M	**61-4510.0**	4	23	9	0.006

Switching action: MA = Maintained action, M = Momentary action

Mounting dimensions from page 58, Technical drawing from page 59, Circuit drawing from page 66

Potentiometer, flush mounting

	Front protection	Front bezel	Terminals	⧄ 24 x 24 mm Typ-Nr.	Ø 25 mm Typ-Nr.	Component layout	Mounting dimensions	Technical drawing	Circuit drawing	kg
Potentiometer, flush mounting 10 k Ω (linear), 1 W, mechanical travel 300 °	IP 65	Plastic black	FR	**61-4970.13**		40	4	9	1	0.023
					61-4970.10	40	4	9	1	0.016

Cable length 300 mm

Terminals: FR = Flat ribbon cable

Component layout from page 53, Mounting dimensions from page 58, Technical drawing from page 59, Circuit drawing from page 66

Front

Lens plastic, raised mounting

mat

	Lens	⌷ 24 x 24 mm Typ-Nr.	⌷ 18 x 18 mm Typ-Nr.	⌷ 18 x 24 mm Typ-Nr.	Ø 24 mm Typ-Nr.	Ø 18 mm Typ-Nr.	kg
Lens plastic, raised mounting flush, illuminative	blue transparent	**61-9351.6**	**61-9321.6**	**61-9331.6**	**61-9642.6**	**61-9311.6**	0.002
	colourless transparent	**61-9351.7**	**61-9321.7**	**61-9331.7**	**61-9642.7**	**61-9311.7**	0.002
	green transparent	**61-9351.5**	**61-9321.5**	**61-9331.5**	**61-9642.5**	**61-9311.5**	0.002
	orange transparent	**61-9351.3**	**61-9321.3**	**61-9331.3**	**61-9642.3**	**61-9311.3**	0.002
	red transparent	**61-9351.2**	**61-9321.2**	**61-9331.2**	**61-9642.2**	**61-9311.2**	0.002
	smoked transparent	**61-9351.1**	**61-9321.1**	**61-9331.1**	**61-9642.1**	**61-9311.1**	0.002
	yellow transparent	**61-9351.4**	**61-9321.4**	**61-9331.4**	**61-9642.4**	**61-9311.4**	0.002
flush, non-illuminative	black opaque	**61-9251.0**	**61-9221.0**	**61-9231.0**		**61-9211.0**	0.002
	grey opaque	**61-9251.8**	**61-9221.8**	**61-9231.8**		**61-9211.8**	0.002
	white translucent	**61-9251.9**	**61-9221.9**	**61-9231.9**		**61-9211.9**	0.002
concave, illuminative	blue transparent		**61-9326.6**	**61-9336.6**			0.002
	colourless transparent		**61-9326.7**	**61-9336.7**			0.002
	green transparent		**61-9326.5**	**61-9336.5**			0.002
	orange transparent		**61-9326.3**	**61-9336.3**			0.002
	red transparent		**61-9326.2**	**61-9336.2**			0.002
	yellow transparent		**61-9326.4**	**61-9336.4**			0.002
concave, non-illuminative	black opaque		**61-9226.0**	**61-9236.0**			0.002
	grey opaque		**61-9226.8**	**61-9236.8**			0.002
	white translucent		**61-9226.9**	**61-9236.9**			0.002

Lens plastic, flush mounting

mat

	Lens	⌷ 24 x 24 mm Typ-Nr.	⌷ 24 x 30 mm Typ-Nr.	Ø 25 mm Typ-Nr.	kg
Lens plastic, flush mounting illuminative	blue transparent flush	**61-9671.6**	**61-9681.6**	**61-9642.6**	0.002
	colourless transparent flush	**61-9671.7**	**61-9681.7**	**61-9642.7**	0.002
	green transparent flush	**61-9671.5**	**61-9681.5**	**61-9642.5**	0.002
	orange transparent flush	**61-9671.3**	**61-9681.3**	**61-9642.3**	0.002
	red transparent flush	**61-9671.2**	**61-9681.2**	**61-9642.2**	0.002
	smoked transparent flush	**61-9671.1**	**61-9681.1**	**61-9642.1**	0.002
	yellow transparent flush	**61-9671.4**	**61-9681.4**	**61-9642.4**	0.002
non-illuminative	black opaque flush	**61-9771.0**	**61-9781.0**		0.002
	grey opaque flush	**61-9771.8**	**61-9781.8**		0.002
	white translucent flush	**61-9771.9**	**61-9781.9**		0.002

Lens plastic with symbol

Lens usable for devices with front dimensions: 24 mm dia., raised mounting | 25 mm dia., flush mounting

	Symbol	Lens	Typ-Nr.	kg
Lens plastic with symbol flush - level, illuminative	ON/OFF	blue transparent	**61-9643.602**	0.002
		colourless transparent	**61-9643.702**	0.002
		green transparent	**61-9643.502**	0.002
		red transparent	**61-9643.202**	0.002
	Ring	blue transparent	**61-9643.601**	0.002
		colourless transparent	**61-9643.701**	0.002
		green transparent	**61-9643.501**	0.002
		orange transparent	**61-9643.301**	0.002
		red transparent	**61-9643.201**	0.002
		yellow transparent	**61-9643.401**	0.002
	Stand by	blue transparent	**61-9643.603**	0.002
		colourless transparent	**61-9643.703**	0.002
		green transparent	**61-9643.503**	0.002
		red transparent	**61-9643.203**	0.002

The silvery coat is being applied on the lens (screen print) with an additional protective lacquer.

Marking plate for lens plastic

can be hot stamped

	Marking plate	Typ-Nr.	kg
Marking plate for lens plastic only applicable with Lens round Typ-Nr. 61-9642.X	Plastic colourless transparent	**61-9707.7**	0.001

Lens metal with spot

mat

Lens usable for devices with front dimensions: 24 mm dia., raised mounting | 25 mm dia., flush mounting

	Lens	Typ-Nr.	kg
Lens metal with spot	Aluminium black flush	**61-9841.0A**	0.002
	Aluminium blue flush	**61-9841.6A**	0.002
	Aluminium gold flush	**61-9841.4A**	0.002
	Aluminium natural flush	**61-9841.8A**	0.002
	Aluminium olive-green flush	**61-9841.5A**	0.002
	Aluminium red flush	**61-9841.2A**	0.002

Lens metal

mat
Lens usable for devices with front dimensions: 24 mm dia., raised mounting | 25 mm dia., flush mounting

	Lens	Typ-Nr.	kg
Lens metal convex	Aluminium black	**61-9842.0**	0.003
	Aluminium blue	**61-9842.6**	0.003
	Aluminium gold	**61-9842.4**	0.003
	Aluminium natural	**61-9842.8**	0.003
	Aluminium olive-green	**61-9842.5**	0.003
	Aluminium red	**61-9842.2**	0.003
flush	Aluminium black	**61-9841.0**	0.002
	Aluminium blue	**61-9841.6**	0.002
	Aluminium gold	**61-9841.4**	0.002
	Aluminium natural	**61-9841.8**	0.002
	Aluminium olive-green	**61-9841.5**	0.002
	Aluminium red	**61-9841.2**	0.002

Mushroom-head cap

	Mushroom had cap	Ø 32 mm Typ-Nr.	kg
Mushroom-head cap	Plastic black opaque	**61-9593.0**	0.004
	Plastic green opaque	**61-9593.5**	0.004
	Plastic red opaque	**61-9593.2**	0.004
	Plastic yellow opaque	**61-9593.4**	0.004

Keylock front bezel for keylock switch, raised mounting

	Keylock front bezel	⌑ 24 x 24 mm Typ-Nr.	⌑ 18 x 18 mm Typ-Nr.	⌑ 18 x 24 mm Typ-Nr.	Ø 18 mm Typ-Nr.	kg
Keylock front bezel for keylock switch, raised mounting	Plastic black	**61-9250.0**	**61-9220.0**	**61-9230.0**	**61-9210.0**	0.001

Keylock front bezel for keylock switch, flush mounting

	Keylock front bezel	⌑ 24 x 24 mm Typ-Nr.	⌑ 24 x 30 mm Typ-Nr.	Ø 25 mm Typ-Nr.	kg
Keylock front bezel for keylock switch, flush mounting	Plastic black	**61-9220.0**	**61-9230.0**	**61-9210.0**	0.001

Lever, raised mounting

with bar and marking dot

	Lever	Bar colour	Typ-Nr.	kg
Lever, raised mounting illuminative	Plastic black	blue	**52-928.60**	0.001
		green	**52-928.50**	0.001
		orange	**52-928.30**	0.001
		red	**52-928.20**	0.001
		yellow	**52-928.40**	0.001
	Plastic grey	blue	**52-929.60**	0.001
		green	**52-929.50**	0.001
		orange	**52-929.30**	0.001
		red	**52-929.20**	0.001
		yellow	**52-929.40**	0.001
non-illuminative	Plastic black	black	**52-928.0**	0.001
		white	**52-928.9**	0.001
	Plastic grey	grey	**52-929.8**	0.001
		white	**52-929.9**	0.001

Lever, flush mounting

with bar and marking dot

	Lever	Bar colour	Typ-Nr.	kg
Lever, flush mounting illuminative	Plastic black	blue	**61-9028.60**	0.001
		green	**61-9028.50**	0.001
		orange	**61-9028.30**	0.001
		red	**61-9028.20**	0.001
		yellow	**61-9028.40**	0.001
	Plastic grey	blue	**61-9029.60**	0.001
		green	**61-9029.50**	0.001
		orange	**61-9029.30**	0.001
		red	**61-9029.20**	0.001
		yellow	**61-9029.40**	0.001
non-illuminative	Plastic black	black	**61-9028.0**	0.001
		white	**61-9028.9**	0.001
	Plastic grey	grey	**61-9029.8**	0.001
		white	**61-9029.9**	0.001

Legend frame

for devices 25 mm dia., flush mounting

	Typ-Nr.	Technical drawing	kg
Legend frame 30 x 50 mm, adhesive, Aluminium black	**61-9980.0**	10	0.001

Technical drawing from page 59

Legend plate insert

for Legend frame 61-9980.0

	Typ-Nr.	kg
Legend plate insert 14.5 x 23.5 mm, adhesive, Aluminium black	**704.968.1**	0.001
14.5 x 23.5 mm, adhesive, Aluminium natural	**704.968.0**	0.001

Front bezel square for selector switch, raised mounting

	Front bezel	Typ-Nr.	kg
Front bezel square for selector switch, raised mounting 24 x 24 mm, for Selector switch	Plastic black	**52-950.0**	0.001
26 x 26 mm, for Selector switch	Plastic black	**52-952.0**	0.001

Front bezel set for Indicators and Illuminated pushbutton, flush mounting

	Front bezel	◻ 24 x 24 mm Typ-Nr.	◻ 24 x 30 mm Typ-Nr.	Ø 25 mm Typ-Nr.	Mounting dimensions	kg
Front bezel set for Indicators and Illuminated pushbutton, flush mounting	Plastic black	**61-9930.0**	**61-9931.0**	**61-9933.10**	4	0.008
	Plastic silver	**61-9930.4**	**61-9931.4**		4	0.008
	Aluminium black			**61-9933.1**	4	0.006
	Aluminium blue			**61-9933.6**	4	0.006
	Aluminium gold			**61-9933.4**	4	0.006
	Aluminium natural			**61-9933.0**	4	0.006
	Aluminium olive-green			**61-9933.5**	4	0.006
	Aluminium red			**61-9933.2**	4	0.006

Mounting dimensions from page 58

Front bezel set for Mushroom-head pushbutton, flush mounting

	Front bezel	Ø 40 mm Typ-Nr.	Ø 25 mm Typ-Nr.	Mounting dimensions	kg
Front bezel set for Mushroom-head pushbutton, flush mounting	Aluminium natural	**61-9934.8**		2	0.013
	Aluminium black		**61-9933.1**	2	0.006
	Aluminium blue		**61-9933.6**	2	0.006
	Aluminium gold		**61-9933.4**	2	0.006
	Aluminium natural		**61-9933.0**	2	0.006
	Aluminium olive-green		**61-9933.5**	2	0.006
	Aluminium red		**61-9933.2**	2	0.006
	Plastic black		**61-9933.10**	2	0.008

Mounting dimensions from page 58

Front bezel set for Keylock switch, flush mounting

	Front bezel	⧈ 24 x 24 mm Typ-Nr.	⧈ 24 x 30 mm Typ-Nr.	Ø 25 mm Typ-Nr.	Mounting dimensions	kg
Front bezel set for Keylock switch, flush mounting	Plastic black	**61-9930.0**	**61-9931.0**	**61-9932.10**	4	0.008
	Plastic silver	**61-9930.4**	**61-9931.4**		4	0.008
	Aluminium black			**61-9932.1**	4	0.006
	Aluminium blue			**61-9932.6**	4	0.006
	Aluminium gold			**61-9932.4**	4	0.006
	Aluminium natural			**61-9932.0**	4	0.006
	Aluminium olive-green			**61-9932.5**	4	0.006
	Aluminium red			**61-9932.2**	4	0.006

With the round front bezel sets Ø25 mm the anti-twist ring is part of the sales-package.
Mounting dimensions from page 58

Front bezel set for Selector switch, flush mounting

	Front bezel	⧈ 24 x 24 mm Typ-Nr.	Ø 25 mm Typ-Nr.	Mounting dimensions	kg
Front bezel set for Selector switch, flush mounting	Plastic black	**61-9936.0**		4	0.007
	Aluminium black		**61-9932.1**	4	0.006
	Aluminium blue		**61-9932.6**	4	0.006
	Aluminium gold		**61-9932.4**	4	0.006
	Aluminium natural		**61-9932.0**	4	0.006
	Aluminium olive-green		**61-9932.5**	4	0.006
	Aluminium red		**61-9932.2**	4	0.006
	Plastic black		**61-9932.10**	4	0.008

With the round front bezel sets Ø25 mm the anti-twist ring is part of the sales-package.
Mounting dimensions from page 58

Front ring, raised mounting

	Front ring	Typ-Nr.	kg
Front ring, raised mounting for Actuator 24 mm dia.	Aluminium black	**61-9600.0**	0.003
	Aluminium natural	**61-9600.1**	0.003

Front protective cap

for flush - level lenses only for protection IP 68

	Front protective cap	Typ-Nr.	kg
Front protective cap for front bezel set 24 x 30 mm, flush mounting	Silicone natural transparent	**61-9927.2**	0.001
for front bezel set round, flush mounting	Silicone natural transparent	**84-9103.7**	0.001

ATTENTION
when using the front protection cover for push buttons the external sealing in the front bezel set and the silicone bellows in the actuator are to be removed !

Protective cover, raised mounting

	⧈ 24 x 24 mm Typ-Nr.	⧈ 18 x 18 mm Typ-Nr.	⧈ 18 x 24 mm Typ-Nr.	Technical drawing	kg
Protective cover, raised mounting hinged, transparent, with means not for sealing	**61-9920.0**			5	0.004
hinged, transparent, with means for sealing		**51-920**		1	0.002
			51-925	2	0.002

Technical drawing from page 59

Protective cover, flush mounting

	⌑ 24 x 24 mm Typ-Nr.	⌑ 24 x 30 mm Typ-Nr.	Ø 25 mm Typ-Nr.	Mounting dimensions	Technical drawing	kg
Protective cover, flush mounting hinged, transparent, with means for sealing	**61-9921.0**			4	6	0.006
		61-9922.0		4	7	0.006
slide by side, with means not for sealing			**61-9924.0**	4	8	0.006

Mounting dimensions from page 58, Technical drawing from page 59

Blind plug, raised mounting

	Blind plug	⌑ 24 x 24 mm Typ-Nr.	⌑ 18 x 18 mm Typ-Nr.	⌑ 18 x 24 mm Typ-Nr.	Ø 18 mm Typ-Nr.	Mounting dimensions	kg
Blind plug, raised mounting	Plastic black	**61-9450.0**	**51-948.0**	**51-947.0**	**51-949.0**	3	0.003

Mounting dimensions from page 58

Blind plug, flush mounting

	Blind plug	⌑ 24 x 24 mm Typ-Nr.	⌑ 24 x 30 mm Typ-Nr.	Ø 25 mm Typ-Nr.	Mounting dimensions	Technical drawing	kg
Blind plug, flush mounting	Plastic black	**61-9451.0**	**61-9452.0**		4		0.006
				61-9453.0	4	13	0.006

Mounting dimensions from page 58, Technical drawing from page 59

Master key

	Typ-Nr.	kg
Master key Lock numbers 311 ... 445 (DOM)	**31-989.300**	0.006

Spare key

	Typ-Nr.	kg
Spare key Emergency-stop, standard lock 1001 (KABA)	**14-987.1001**	0.006
Key lock switch, standard lock 311 (DOM)	**31-989.311**	0.006

Other lock numbers on request

EMC Key protection cap

	Typ-Nr.	kg
EMC Key protection cap Plastic black, for lock type DOM	**31-985.0**	0.005

Backside

Lamp element

	Terminals	Typ-Nr.	Component layout	Circuit drawing	kg
Lamp element	ST	**61-8006.01**	31	4	0.005
	S1	**61-8006.02**	3	4	0.005

Terminals: ST = Screw terminal, S1 = Soldering terminal (also pluggable 2.8 x 0.5 mm)
Component layout from page 53, Circuit drawing from page 66

Diode element

	Terminals	Typ-Nr.	Component layout	Circuit drawing	kg
Diode element 1 Diode	S1	**61-8101.02**	1	20	0.007
2 Diodes	S1	**61-8102.02**	2	21	0.008

Terminals: S1 = Soldering terminal (also pluggable 2.8 x 0.5 mm)
Component layout from page 53, Circuit drawing from page 66

Flasher element

only for Indicator actuator

	Terminals	Typ-Nr.	Component layout	kg
Flasher element Operation voltage : 12 ... 28 VAC/DC ±10 %	S	**61-8000.05**	30	0.005

Further information in the Technical Data and Typical Applications
Terminals: S = Soldering terminal
Component layout from page 53

Switching element for Pushbutton | Keylock- and Selector switch 2 positions

	Diode (1N 4007)	Switch rating	Switching system	Contacts	Terminals	Contact material	Typ-Nr.	Component layout	Circuit drawing	kg
Switching element for Pushbutton | Keylock- and Selector switch 2 positions with lamp terminal	2 D	250 VAC, 5 A	SA	1 NO	S1	Au-Ag	**61-8212.22**	36	28	0.007
						Ag	**61-8212.12**	36	28	0.007
	-	250 VAC, 5 A	SM	1 NC	ST	Ag	**61-8640.11**	23	22	0.008
					S1	Ag	**61-8640.17**	14	23	0.008
				1 NC + 1 NO	S1	Ag	**61-8670.17**	13	30	0.008
				1 NO	ST	Ag	**61-8610.11**	22	27	0.008
					S1	Ag	**61-8610.17**	11	27	0.008
				2 NC	S1	Ag	**61-8650.17**	15	24	0.008
				2 NO	S1	Ag	**61-8620.17**	12	34	0.008
			SA	1 NC	S1	Au-Ag	**61-8440.22**	4	23	0.007
						Ag	**61-8440.12**	4	23	0.007
				1 NC + 1 NO	S1	Au-Ag	**61-8470.22**	34	30	0.007
						Ag	**61-8470.12**	34	30	0.007
				1 NC + 2 NO	S1	Au-Ag	**61-8490.22**	35	32	0.007
						Ag	**61-8490.12**	35	32	0.007
				1 NO	S1	Au-Ag	**61-8410.22**	28	27	0.007
						Ag	**61-8410.12**	28	27	0.007
				2 NC	S1	Au-Ag	**61-8450.22**	5	24	0.007
						Ag	**61-8450.12**	5	24	0.007
				2 NC + 1 NO	S1	Au-Ag	**61-8480.22**	7	31	0.007
						Ag	**61-8480.12**	7	31	0.007
				2 NO	S1	Au-Ag	**61-8420.22**	32	34	0.007
						Ag	**61-8420.12**	32	34	0.007
				3 NC	S1	Au-Ag	**61-8460.22**	6	25	0.007
						Ag	**61-8460.12**	6	25	0.007
				3 NO	S1	Au-Ag	**61-8430.22**	33	35	0.007
						Ag	**61-8430.12**	33	35	0.007
		42 VAC, 100 mA	SM	1 NC	S1	Au	**61-8640.37**	14	23	0.008
				1 NC + 1 NO	S1	Au	**61-8670.37**	13	30	0.008
				1 NO	S1	Au	**61-8610.37**	11	27	0.008
				2 NC	S1	Au	**61-8650.37**	15	24	0.008
				2 NO	S1	Au	**61-8620.37**	12	34	0.008
without lamp terminal	-	250 VAC, 5 A	SM	1 NC	ST	Ag	**61-8645.11**	25	22	0.008
				1 NC + 1 NO	ST	Ag	**61-8675.11**	26	29	0.008
				1 NO	ST	Ag	**61-8615.11**	24	26	0.008
				2 NC	ST	Ag	**61-8655.11**	29	36	0.008
				2 NO	ST	Ag	**61-8625.11**	27	33	0.008

We offer a Dismantling tool Typ-Nr. 61-9711.0 for dismantling of the Switching element
Diode (1N 4007): D = Diode, - = without
Switching system: SA = Snap-action switching element, SM = Slow-make switching element
Contacts: NO = Normally open, NC = Normally closed
Terminals: S1 = Soldering terminal (also pluggable 2.8 x 0.5 mm), ST = Screw terminal
Contact material: Au-Ag = Gold-Silver, Ag = Silver, Au = Gold
Component layout from page 53, Circuit drawing from page 66

Switching element for Keylock- and Selector switch 3 positions

	Switch rating	Switching system	Contacts	Terminals	Contact material	Typ-Nr.	Component layout	Circuit drawing	kg
Switching element for Keylock- and Selector switch 3 positions with lamp terminal	250 VAC, 5 A	SM	1 NC + 1 NO	S1	Ag	**61-8770.17**	16	30	0.008
			2 NC	S1	Ag	**61-8750.17**	18	24	0.008
			2 NO	S1	Ag	**61-8720.17**	17	34	0.008
		SA	1 NC + 1 NO	S1	Au-Ag	**61-8574.22**	10	30	0.008
					Ag	**61-8574.12**	10	30	0.008
			2 NC	S1	Au-Ag	**61-8550.22**	8	24	0.008
					Ag	**61-8550.12**	8	24	0.008
			2 NO	S1	Au-Ag	**61-8520.22**	9	34	0.008
					Ag	**61-8520.12**	9	34	0.008
	42 VAC, 100 mA	SM	1 NC + 1 NO	S1	Au	**61-8770.37**	16	30	0.008
			2 NC	S1	Au	**61-8750.37**	8	24	0.008
			2 NO	S1	Au	**61-8720.37**	9	34	0.008
without lamp terminal	250 VAC, 5 A	SM	1 NC + 1 NO	ST	Ag	**61-8775.11**	26	37	0.008
			2 NC	ST	Ag	**61-8755.11**	29	36	0.008
			2 NO	ST	Ag	**61-8725.11**	27	33	0.008

We offer a Dismantling tool Typ-Nr. 61-9711.0 for dismantling of the Switching element
Switching system: SM = Slow-make switching element, SA = Snap-action switching element
Contacts: NC = Normally closed, NO = Normally open
Terminals: S1 = Soldering terminal (also pluggable 2.8 x 0.5 mm), ST = Screw terminal
Contact material: Ag = Silver, Au-Ag = Gold-Silver, Au = Gold
Component layout from page 53, Circuit drawing from page 66

Switching element for Emergency-stop pushbutton, foolproof EN IEC 60947-5-5

	Switch rating	Switching system	Contacts	Terminals	Contact material	Typ-Nr.	Component layout	Circuit drawing	kg
Switching element for Emergency-stop pushbutton, foolproof EN IEC 60947-5-5	250 VAC, 5 A	SM	1 NC	ST	Ag	**61-8745.11**	25	38	0.008
				S1	Ag	**61-8745.17**	20	38	0.008
			1 NC + 1 NO	ST	Ag	**61-8775.11**	26	37	0.008
				S1	Ag	**61-8775.17**	19	37	0.008
			2 NC	ST	Ag	**61-8755.11**	29	36	0.008
				S1	Ag	**61-8755.17**	21	36	0.008

General specifications for Switching element for Emergency-stop pushbutton : If not otherwise stated, certified according to EN IEC 60947-5-5. Further specifications in the Technical data
Switching system: SM = Slow-make switching element
Contacts: NC = Normally closed, NO = Normally open
Terminals: ST = Screw terminal, S1 = Soldering terminal (also pluggable 2.8 x 0.5 mm)
Contact material: Ag = Silver
Component layout from page 53, Circuit drawing from page 66

Switching element for Stop pushbutton, foolproof

	Switch rating	Switching system	Contacts	Terminals	Contact material	Typ-Nr.	Component layout	Circuit drawing	kg
Switching element for Stop pushbutton, foolproof	42 VAC, 100 mA	SM	1 NC	S1	Au	**61-8745.37**	20	38	0.008
			1 NC + 1 NO	S1	Au	**61-8775.37**	19	37	0.008
			2 NC	S1	Au	**61-8755.37**	21	36	0.008

Switching system: SM = Slow-make switching element
Contacts: NC = Normally closed, NO = Normally open
Terminals: S1 = Soldering terminal (also pluggable 2.8 x 0.5 mm)
Contact material: Au = Gold
Component layout from page 53, Circuit drawing from page 66

PCB plug-in base

	Terminals	Typ-Nr.	Component layout	kg
PCB plug-in base 13.1 dia. x 12.8 mm for Indicator complete	P	**61-9820.1**	37	0.002
15 x 23 x 9.4 mm for Snap-action Switching element, Indicator- and Diode element, Pins axial	P	**61-9821.1**	38	0.003
17.7 x 23.6 x 10.9 mm for Slow-make Switching element, Pins axial	P	**61-9823**	39	0.002

Terminals: P = PCB terminal
Component layout from page 53

Multi-plug housing

	Typ-Nr.	kg
Multi-plug housing for Snap-action Switching element, max. 6 connections possible	**61-9830**	0.002

Flat receptacle

	Typ-Nr.	kg
Flat receptacle 2.8 x 0.5 mm for Multi-plug housing	**51-943.1**	0.001
2.8 x 0.5 mm for Plug-in terminal	**31-946**	0.001

Insulation sleeve

	Typ-Nr.	kg
Insulation sleeve for Flat receptacles 31-946	**31-929**	0.001

Terminal cover

	Typ-Nr.	kg
Terminal cover for Indicator complete	**61-9831.2**	0.001
for Snap-action Switching element with soldering terminal	**61-9830.2**	0.002

Illumination

Filament lamp

	Socket	Operating voltage/-current	Typ-Nr.	kg
Filament lamp	T1 $^{3}/_{4}$ MG	12 VAC/DC, 75 mA	**10-1309.1309**	0.001
		14 VAC/DC, 80 mA	**10-1310.1319**	0.001
		18 VAC/DC, 40 mA	**10-1311.1249**	0.001
		24 VAC/DC, 35 mA	**10-1312.1229**	0.001
		28 VAC/DC, 30 mA	**10-1313.1209**	0.001
		28 VAC/DC, 40 mA	**10-1313.1249**	0.001
		36 VAC/DC, 20 mA	**10-1316.1179**	0.001
		36 VAC/DC, 30 mA	**10-1316.1209**	0.001
		48 VAC/DC, 20 mA	**10-1319.1179**	0.001
		48 VAC/DC, 25 mA	**10-1319.1199**	0.001
		6 VAC/DC, 120 mA	**10-1306.1349**	0.001
		6.3 VAC/DC, 200 mA	**10-1307.1369**	0.001

Single-LED

	Socket	Light colour	Operating voltage/-current	Typ-Nr.	kg
Single-LED	T1 $^3/_4$ MG	blue	12 VAC/DC, 7/14 mA	**10-2J09.1066**	0.002
			24 VAC/DC, 7/14 mA	**10-2J12.1066**	0.002
			28 VAC/DC, 7/14 mA	**10-2J13.1066**	0.002
			48 VAC/DC, 4/8 mA	**10-2J19.1046**	0.002
			6 VDC, 15 mA	**10-2J06.3146**	0.002
		green	12 VAC/DC, 4/7 mA	**10-2J09.1065**	0.002
			24 VAC/DC, 4/7 mA	**10-2J12.1065**	0.002
			28 VAC/DC, 4/7 mA	**10-2J13.1065**	0.002
			48 VAC/DC, 2/4 mA	**10-2J19.1045**	0.002
			6 VDC, 7 mA	**10-2J06.3145**	0.002
		red	12 VAC/DC, 7/14 mA	**10-2J09.1062**	0.002
			24 VAC/DC, 7/14 mA	**10-2J12.1062**	0.002
			28 VAC/DC, 7/14 mA	**10-2J13.1062**	0.002
			48 VAC/DC, 4/8 mA	**10-2J19.1042**	0.002
			6 VDC, 15 mA	**10-2J06.3142**	0.002
		white diffuse	12 VAC/DC, 7/14 mA	**10-2J09.1069**	0.002
			24 VAC/DC, 7/14 mA	**10-2J12.1069**	0.002
			28 VAC/DC, 7/14 mA	**10-2J13.1069**	0.002
			48 VAC/DC, 4/8 mA	**10-2J19.1049**	0.002
			6 VDC, 15 mA	**10-2J06.3149**	0.002
		yellow	12 VAC/DC, 7/14 mA	**10-2J09.1064**	0.002
			24 VAC/DC, 7/14 mA	**10-2J12.1064**	0.002
			28 VAC/DC, 7/14 mA	**10-2J13.1064**	0.002
			48 VAC/DC, 4/8 mA	**10-2J19.1044**	0.002
			6 VDC, 15 mA	**10-2J06.3144**	0.002

Note:
AC operation through halve-wave rectifier possible, slight flickering can occure.

Terminal plate empty

for fitting with series resistors

	Typ-Nr.	kg
Terminal plate empty 10 spaces 125 x 60 x 15 mm	**02-912.2**	0.045
15 spaces 187.5 x 60 x 15 mm	**02-912.3**	0.090
20 spaces 250 x 60 x 15 mm	**02-912.4**	0.095
5 spaces 62.5 x 60 x 15 mm	**02-912.1**	0.025

Emergency-stop pushbutton

Emergency-stop label

Mounting hole size 16 mm dia.

	Marking	Typ-Nr.	kg
Emergency-stop label 43 mm dia., yellow	ARRET-D´URGENCE	**61-9970.3**	0.002
	EMERGENCY-STOP	**61-9970.2**	0.002
	NOT-AUS	**61-9970.1**	0.002
	NOT-HALT	**61-9970.6**	0.002
	without marking	**61-9970.0**	0.002

Emergency-stop protective shroud

	Typ-Nr.	Technical drawing	kg
Emergency-stop protective shroud Aluminium anodized, yellow varnished	**61-9965**	11	0.036

The protection ring is not suitable for a proper use of Emergency-stop pushbutton. It can obstruct a spontaneous operation of the Emergency-stop pushbutton.
Technical drawing from page 59

Emergency-stop enclosures

Bottom grey similar RAL 7035; cover lead-sealable, yellow similar RAL 1004

	Dimension	Typ-Nr.	Technical drawing	kg
Emergency-stop enclosures with mounting hole size 16 mm dia., without anti- twist device	L 65 mm, W 65 mm, H 57 mm	**61-9480.5**	12	0.099

Openings for cable gland M16 or M20.
Protection class IP 66.
Technical drawing from page 59

Cable gland

	Typ-Nr.	kg
Cable gland M16, Plastic grey	**61-9481.6**	0.007
M20, Plastic grey	**704.945.6**	0.011

with traction relief; protection degree IP 68.

Assembling

Fixing nut

	Typ-Nr.	kg
Fixing nut Metal, specifically for keylock switches	**31-991**	0.005
Plastic, standard delivery	**61-9915.0**	0.002

Anti-twist ring

	Typ-Nr.	kg
Anti-twist ring Mounting hole size 16 mm dia.	**51-910**	0.001
Mounting hole size 22.5 mm dia.	**61-9912.0**	0.002

Reducing ring

without Keylock- and Selector switch

	Typ-Nr.	kg
Reducing ring only for use of devices with Front size 24 x 24 mm and 24 mm dia., Mounting hole size 22.5 mm dia. to 16.5 mm dia.	**61-9960**	0.003

Tool set

consists of Lens remover, Lamp-and LED remover, Mounting tool, Dismantling tool

	Typ-Nr.	kg
Tool set	**K61-999.100**	0.048

for dismantling keep care of the enclosed Packing insert

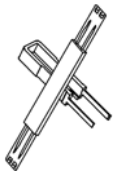

Lens remover

	Typ-Nr.	kg
Lens remover for flush mounting	**61-9730.0**	0.011
for raised mounting	**02-905**	0.011

Lamp remover

	Typ-Nr.	kg
Lamp remover	**61-9740.0**	0.003

CAUTION
A switching process might be released when replacing the lamp/LED !

Mounting tool

	Typ-Nr.	kg
Mounting tool for Indicator 16 mm dia.	**01-907**	0.020

Dismantling tool

	Typ-Nr.	kg
Dismantling tool for dismantling of the Switching element	**61-9711.0**	0.004

Flat receptacle remover

	Typ-Nr.	kg
Flat receptacle remover for removing the Flat receptacle of the Multi-plug in housing	**51-943.9**	0.001

Enclosure

Grey similar RAL 7035; cover lead-sealable

	Dimension	Typ-Nr.	Technical drawing	kg
Enclosure with mounting hole size 16 mm dia., without anti- twist device	L 65 mm, W 65 mm, H 57 mm	**61-9480.6**	12	0.099

Openings for cable gland M16 or M20.
Protection class IP 66.
Technical drawing from page 59

Cable gland

	Typ-Nr.	kg
Cable gland M16, Plastic grey	**61-9481.6**	0.007
M20, Plastic grey	**704.945.6**	0.011

with traction relief; protection degree IP 68.

Actuator with snap-action switching element

Switching system

Self-cleaning, double-break snap-action switching system with contact opening width 2 x 0.5 mm (switch with small contact opening width as per EN IEC 61058-1).
The switching elements are optionally equipped with the following switching functions :
One to three normally open (NO) or normally closed (NC), or any combination of NO and NC plus connections for T1 $^3/_4$ LED or lamp. The number of switching elements cannot exceed three.
The switching elements provided for the 3-position switch actuators are equipped with max. 2 NC or 2 NO or any combination. The number of switching elements cannot exceed two.

Material

Lens
Raised mounting Polymethylmethacrylat (PMMA), as per UL 94 HB, flush mounting Polycarbonat (PC), as per UL 94 V0, or Aluminium anodized

Front bezel
Polyetherimid (PEI), as per UL 94 V0, or Aluminium anodized

Front ring
Aluminium anodized

Material of contact
Silver or silver with gold plating

Switching element
Diallylphthalate (DAP), as per UL 94 V0 and Polyamide (PA 66), as per UL 94 V0

Actuator housing
Polyetherimide (PEI), as per UL 94 V0, self-extinguishing

Mechanical characteristics

Terminals

- Solder	rigid	flexible	superflexible
1 wire	0.5 ... 1.5 mm²	0.5 ... 0.75 mm²	0.5 mm²
2 wires	0.75 mm²	0.5 mm²	

Actuating torque

Selector-/ Keylock switch 2.5 ... 10 Ncm

Actuating force

Pushbutton 2.7 ... 3.6 N

Actuating travel

Pushbutton 3 mm

Selector-/ keylock switch	2 positions	3 positions
Momentary action	approx. 42 °	approx. 2 x 42 °
Maintained action	approx. 90 °	approx. 2 x 90 °

Rebound time
The rebound times apply to normal manual activation

Contact making	3 ms
Contact breaking	5 ms

Mechanical lifetime
as per DIN IEC 60512-5-6 and EN IEC 60947-5-1

Pushbutton maintained action	1 million	cycles of operation
Pushbutton momentary action	2 million	cycles of operation
Emergency-stop switch	6 050	cycles of operation
Keylock switch	50 000	cycles of operation
Selector switch	100 000	cycles of operation

Electrical characteristics

Standards
The devices comply with : EN IEC 61058-1 and EN IEC 60947-5-1

Rated Operational Voltage U_e
250 VAC/DC as per EN IEC 60947-1

Rated Insulation Voltage U_i
320 VAC, as per EN IEC 60947-5-1

Rated Impulse Withstand Voltage U_{imp}
4 kV, as per EN IEC 60947-5-1

Contact resistance
New state with silver contact ≤100 mΩ
as per DIN IEC 60512-2-4, measured at 100 mA, 10 V

New state with gold plated contact ≤50 mΩ
as per DIN IEC 60512-2-3, measured at 20 mV, 10 mA

Electrical life
≥50.000 cycles of operation at 250 VAC, 5 A, cosϕ 0.95, as per EN IEC 60947-5-1

Electrostatic discharge (ESD)

Keylock switch 11 kV

Conventional free air thermal current I_{th}
5 A, as per EN IEC 60947-5-1
the maximum current in continuous operation and at ambient temperature must not exceed the quoted maximum values.

Switch rating
Switch rating AC with silver contact or silver contact with gold plating, service category AC-15, as per EN IEC 60947-5-1

Voltage	125 VAC	250 VAC
Current	2.5 A	2 A

Switch rating DC for silver contact or silver contact with gold plating, service category DC-13, as per EN IEC 60947-5-1

Voltage	250 VDC
Current	0.15 A

Recommended minimum operational data

Material of contact	Silver	Silver with gold plating
Voltage	20 VAC/DC	5 VAC/DC
Current	100 mA	10 mA

Electric strength
2500 VAC, 50 Hz, 1 min., as per DIN IEC 60512-2-11
between all terminals and earth

Overvoltage category
III, as per EN IEC 60947-5-1

Protection class
Class II, as per EN IEC 61058-1

Degree of pollution
3, as per EN IEC 60947-1

Environmental conditions

Storage temperature
-40 °C ... +85 °C

Operating temperature
-25 °C ... +55 °C

Protection degree
as per EN IEC 60529
Frontside IP 65 | backside IP 40

Shock resistance
(semi-sinusoidal)
max. 100 m/s², pulse width 11 ms, 3-axis, as per EN IEC 60068-2-27

Vibration resistance
(sinusoidal)
max. 100 m/s² at 10 Hz ... 500 Hz, as per EN IEC 60068-2-6

Climate resistance
Damp heat, cyclic
96 hours, +25 °C / 97 %, +55 °C / 93 % relative humidity, as per EN IEC 60068-2-30

Damp heat, state
56 days, +40 °C / 93 % relative humidity, as per EN IEC 60068-2-78

Rapid change of temperature
100 cycles, -40 °C ... +80 °C, as per EN IEC 60068-2-14

Approvals

Approbations
CB (IEC 61058)
CB (IEC 60947)
CSA
ENEC (EN 61058)
Germanischer Lloyd
GOST
UL
VDE

Declaration of conformity
CE

Actuator with slow-make switching element

Switching system

Double-break slow-make system, contact opening width 2 x 1.5 mm, with 2 x 2 contact points per switching element.
NC-contact elements in the slow-make elements fulfill requirements of switches with forced opening as per EN IEC 60947-5-1 2.17
The slow-make elements are optionally obtainable with the following switching functions : 1 NO or 2 NO, 1 NC or 2 NC, 1 NO + 1 NC.

Material

Lens
Raised mounting Polymethylmethacrylat (PMMA), as per UL 94 HB, flush mounting Polycarbonat (PC), as per UL 94 V0, or Aluminium anodized

Front bezel
Polyetherimid (PEI), as per UL 94 V0, or Aluminium anodized

Front ring
Aluminium anodized

Material of contact
Silver or gold (specified for operation for low level switching)

Switching element
Diallylphthalate (DAP), as per UL 94 V0 and Polyamide (PA 66), as per UL 94 V0

Actuator housing
Polyetherimide (PEI), as per UL 94 V0, self-extinguishing

Mechanical characteristics

Terminals

- Solder	rigid	flexible	superflexible
1 wire	0.5 ... 1.5 mm²	0.5 ... 0.75 mm²	0.5 mm²
2 wires	0.75 mm²	0.5 mm²	
- Screw			
1 wire	0.5 ... 1.5 mm²	0.5 ... 0.75 mm²	0.5 mm²
2 wires	0.75 mm²	0.5 mm²	0.5 mm²

Actuating torque

Selector-/ Keylock switch	4 ... 16 Ncm

Actuating force

Pushbutton	3.5 ... 11 N
Emergency-stop switch	max. 65 N

Actuating travel

Pushbutton	3 mm	
Emergency-stop switch	10 mm	
Selector-/ keylock switch	2 positions	3 positions
Momentary action	approx. 42 °	approx. 2 x 42 °
Maintained action	approx. 90 °	approx. 2 x 90 °

Rebound time
2 ms, contact making and contact breaking
the rebound times apply to normal manual activation

Mechanical lifetime
as per DIN IEC 60512-5-6 and EN IEC 60947-5-1

Pushbutton maintained action	1 million	cycles of operation
Pushbutton momentary action	2 million	cycles of operation
Emergency-stop switch	6 050	cycles of operation
Keylock switch	50 000	cycles of operation
Selector switch	100 000	cycles of operation

Electrical characteristics

Standards
The devices comply with : EN IEC 61058-1 and EN IEC 60947-5-1, EN IEC 60947-5-5 (Emergency-stop)

Electrical life
≥50.000 cycles of operation at 250 VAC, 5 A, cosϕ 0.95, as per EN IEC 60947-5-1
Switching Element of Emergency-stop 6050 cycles of operation, as per EN IEC 60947-5-5

Electrostatic discharge (ESD)

Keylock switch 11 kV

Electric strength
4000 VAC, 50 Hz, 1 min., as per DIN IEC 60512-2
between all terminals and earth

Overvoltage category
III, as per EN IEC 60947-5-1

Protection class
Class II, as per EN IEC 61058-1

Degree of pollution
3, as per EN IEC 60947-1

Electrical characteristics for silver contacts

Rated Operational Voltage U_e
250 VAC/DC as per EN IEC 60947-1

Rated Insulation Voltage U_i
320 VAC, as per EN IEC 60947-5-1

Rated Impulse Withstand Voltage U_{imp}
4 kV, as per EN IEC 60947-5-1

Contact resistance
New state ≤50 mΩ, as per DIN IEC 60512-2-4, measured at 100 mA, 10 V

Conventional free air thermal current I_{th}
5 A, as per EN IEC 60947-5-1
the maximum current in continuous operation and at ambient temperature must not exceed the quoted maximum values.

Switch rating
Switch rating AC with silver contact and srew terminal, service category AC-15, as per EN IEC 60947-5-1

Voltage	125 VAC	250 VAC
Current	3 A	2 A

Switch rating with silver contact and screw terminal, service category DC-13, as per EN IEC 60947-5-1

Voltage	250 VDC
Current	0.2 A

Recommended minimum operational data
20 VAC/DC, 100 mA

Electrical characteristics for gold contacts

Rated Operational Voltage U_e
50 VAC/DC, as per EN IEC 60947-5-1

Rated Insulation Voltage U_i
U_i = 320 VAC, as per EN IEC 60947-5-1

Rated Impulse Withstand Voltage U_{imp}
0.8 kV, as per EN IEC 60947-1

Contact resistance
New state ≤50 mΩ
as per DIN IEC 60512-2-4, measured at 20 mV, 10 mA

Conventional free air thermal current I_{th}
3 A, as per EN IEC 60947-5-1
the maximum current in continuous operation and at ambient temperature must not exceed the quoted maximum values.

Switch rating
Switch rating AC with gold contact, service category AC-15, as per EN IEC 60947-5-1

Voltage	50 VAC
Current	0.5 A

Switch rating with gold contact, service category DC-13, as per EN IEC 60947-5-1

Voltage	50 VDC
Current	0.1 A

Recommended minimum operational data

Voltage	10 mVAC/DC
Current	2 mA

Environmental conditions

Storage temperature
-40 °C ... +85 °C

Operating temperature
-25 °C ... +55 °C

Protection degree
as per EN IEC 60529
Frontside IP 65 | backside IP 40

Shock resistance
(semi-sinusoidal)
max. 100 m/s², pulse width 11 ms, 3-axis, as per EN IEC 60068-2-27

Vibration resistance
(sinusoidal)
max. 100 m/s² at 10 Hz ... 500 Hz, as per EN IEC 60068-2-6

Climate resistance
Damp heat, cyclic
96 hours, +25 °C / 97 %, +55 °C / 93 % relative humidity, as per EN IEC 60068-2-30

Damp heat, state
56 days, +40 °C / 93 % relative humidity, as per EN IEC 60068-2-78

Rapid change of temperature
100 cycles, -40 °C ... +80 °C, as per EN IEC 60068-2-14

Approvals

Approbations
CB (IEC 61058)
CB (IEC 60947)
ENEC (EN 61058)
Germanischer Lloyd
GOST
SEV
UL
VDE

Declaration of conformity
CE

Actuator with flasher element

Material

Lens
Raised mounting Polymetylmethacrylat PMMA, as per UL 94 HB, flush mounting Polycarbonat (PC), as per UL 94 V0

Actuator housing
Polyetherimide (PEI), as per UL 94 V0, self-extinguishing

Flasher element
Polyetherimide (PEI), as per UL 94 V0

Mechanical characteristics

Terminals
Soldering terminal

Electrical characteristics

Illumination

Filament lamp	14 V AC/DC	28 VAC/DC
Power consumption	80 mA	44 mA
Single-LED	12 VAC/DC	28 VAC/DC
Power consumption	15 mA	18 mA

Flashing frequency
1 Hz ±0.25 Hz

Pulse duty factor
approx. 50 %

Operating voltage
12 ... 28 VAC/DC ±10 %

Environmental conditions

Operating temperature
0 °C ... +45 °C

Protection degree
as per EN IEC 60529
Frontside IP 65 | backside IP 40

Diode element

When indicators and illuminated pushbuttons equipped with diodes, the user is able to perform a lamp check or wire an alarm circuit simply with a considerable saving of space.

Lamp check

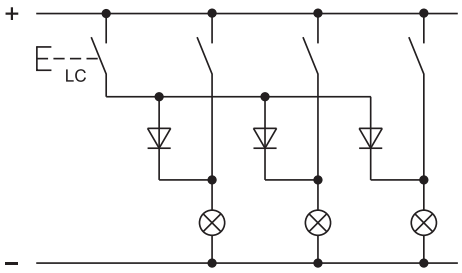

Lamp check with blocking diodes

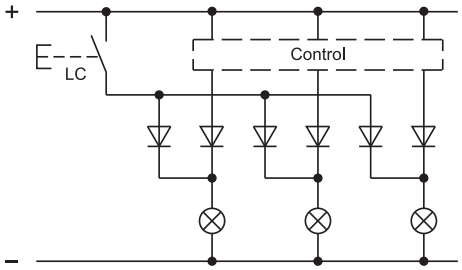

Alarm circuit from fault annunciation system

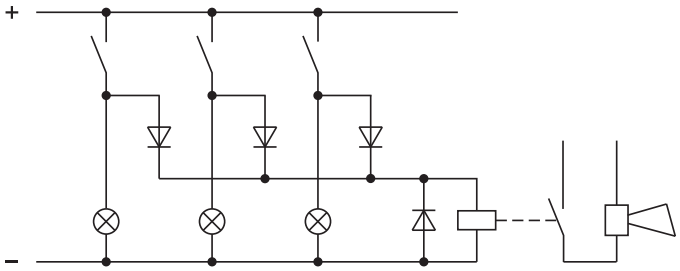

Lamp check and alarm circuit

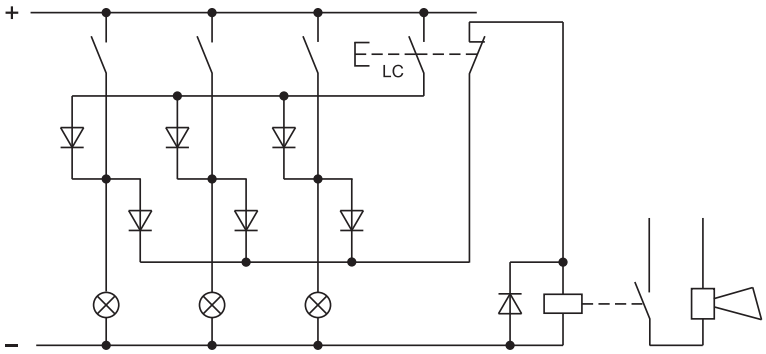

Lamp check and alarm circuit with only one diode and AC voltage

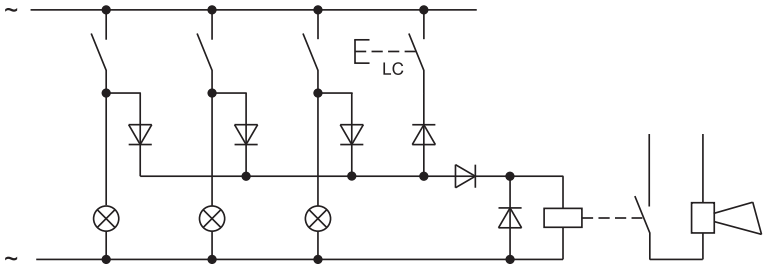

LC = Lamp Check

Flasher element

Do not connect terminal B and D simultaneously when powered up. When operating with DC voltage terminal G must have positive polarity.

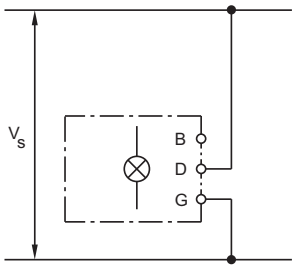

Continuous light

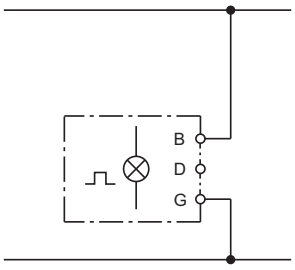

Flashing light

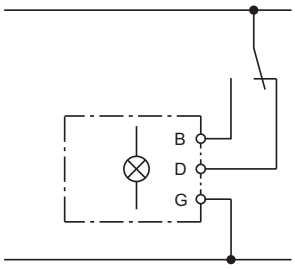

Flashing- or continuous light

Suppressor circuits

When switching inductive loads such as relays, DC motors, and DC solenoids, it is always important to absorb surges (e.g. with a diode) to protect the contacts. When these inductive loads are switched off, a counter emf can severely damage switch contacts and greatly shorten lifetime.

Fig. 1 shows an inductive load with a free-wheeling diode connected in parallel. This free-wheeling diode provides a path for the inductor current to flow when the current is interrupted by the switch. Without this free-wheeling diode, the voltage across the coil will be limited only by dielectric breakdown voltages of the circuit or parasitic elements of the coil. This voltage can be kilovolts in amplitude even when nominal circuit voltages are low (e.g. 12 VDC) see Fig. 2.

The free-wheeling diode should be chosen so that the reverse breakdown voltage is greater than the voltage driving the inductive load. The DC blocking voltage (VR) of the free-wheeling diode can be found in the datasheet of a diode. The forward current should be equal or greater than the maximum current flowing through the load.

To get an efficient protection, the free-wheeling diode must be connected as close as possible to the inductive load!

Switching with inductive load
Fig. 1

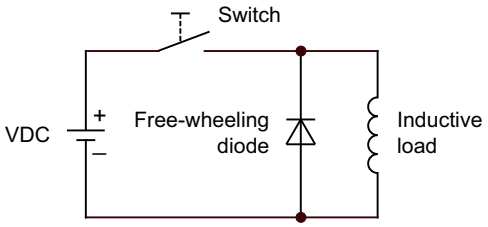

Counter emf
over load without free-wheeling diode
Fig. 2

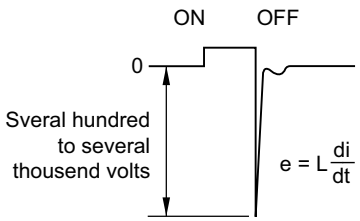

General notes

1. Engraving
In addition to the most commonly used world languages, in DIN 1451-3 close spacing, other typefaces are available as Scandinavian, Slavic, Greek, Russian and Polish.
Red, blue and black lenses are filled with white colour. Other colour lenses are filled in black.
Standard height of letters is 2 mm. If the height is not specified, we will supply 2 mm engraved letters.

2. Hot stamping
For larger series it is worth considering markings by means of hot stamping or laser engraving. We will pleased to advise you.
For letters and figures, typefaces with 2.5 mm, 3 mm and 4 mm are available.

3. Film inserts
Instead of using engraving the lenses can be fitted with transparent film inserts, as an alternative.
In the case of use of a smoke-black lens the fitted film becomes readable only if the lamp is on.
The film thickness is 0.2 mm.
For lenses 24 mm and 25 mm dia. with Typ-Nr. 619642.x the marking takes place directly on the text plate Typ-Nr. 61-9707.7, instead of a film insert.
Important : Consider pushbutton mounting orientation before specifying engraving characters !

Lenses for Indicators | Illuminated pushbuttons, flush mounting

All dimensions in mm

Front size (Lens)	Film insert max. size	Height of letters h	Number of lines	Number of (target value) capital letters per line	Number of (target value) small letters per line	Image
24 x 24 (18 x 18)	15.1 x 15.1	2	4	8 - 9	9	B3
		3	3	7 - 8	8	B3
		4	2	4 - 5	5	B3
		5	2	4	4 - 5	B3
		6	1	4	4	B3
		8	1	2 - 3	2 - 3	B3
24 x 30 (18 x 24)	15.1 x 21	2	4	12	13	B1
			5	8 - 9	9	B2
		3	3	10 - 11	11 - 12	B1
			4	7 - 8	8	B2
		4	2	7	8	B1
			3	4 - 5	5	B2
		5	2	5 - 6	6	B1
				4	4 - 5	B2
		6	1	4 - 5	5	B1
			2	3	3 - 4	B2
		8	1	3 - 4	3 - 4	B1
				2 - 3	2 - 3	B2
25 dia. (19.7 dia.)	Marking plate	2	3	6	6	B4
		3	2	5	6	B4
		4	2	3	4	B4
		5	1	2	3	B4
		6	1	2	3	B4
		8	1	2	2	B4

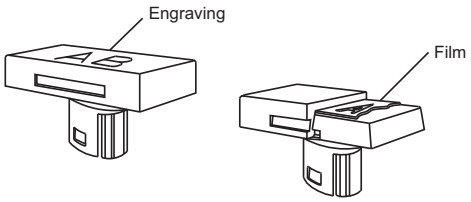

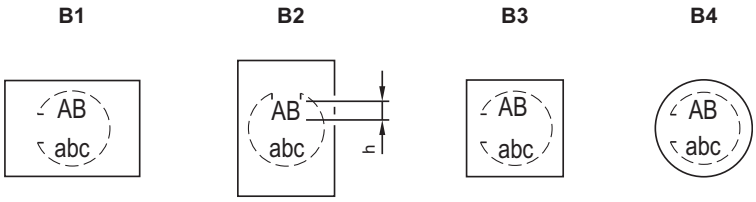

Lenses for Indicators | Illuminated pushbuttons, raised mounting

All dimensions in mm

Front size (Lens)	Film insert max. size	Height of letters h	Number of lines	Number of (target value) capital letters per line	Number of (target value) small letters per line	Image
18 dia. (15.8 dia.)	12.8 dia.	2		6	6	B4
		3	2	5	6	B4
		4	2	3	4	B4
		5	1	2	3	B4
		6	1	2	3	B4
		8	1	2	2	B4
18 x 18 (15.3 x 15.3)	12.7 x 12.7	2	4	7 - 8	8	B3
		3	3	6 - 7	7	B3
		4	2	4 - 5	5	B3
		5	2	3 - 4	4	B3
		6	1	3	3 - 4	B3
		8	1	2 - 3	2 - 3	B3
18 x 24 (15.3 x 21.5)	12.7 x 18.7	2	4	11	12	B1
			5	7 - 8	8	B2
		3	3	9 -10	10 - 11	B1
			4	6 - 7	7	B2
		4	2	7	7 - 8	B1
			3	4 - 5	5	B2
		5	2	5 - 6	6	B1
				3 - 4	4	B2
		6	1	4 - 5	5	B1
			2	3	3 - 4	B2
		8	1	3 - 4	3 - 4	B1
				2 - 3	2 - 3	B2
24 dia. (19.7 dia.)	Marking plate	2	3	6	6	B4
		3	2	5	6	B4
		4	2	3	4	B4
		5	1	2	3	B4
		6	1	2	3	B4
		8	1	2	2	B4
24 x 24 (20 x 20)	16.9 x 16.9	2	4	9	10	B3
		3	3	7 - 8	9	B3
		4	2	4 - 5	5	B3
		5	2	4	4 - 5	B3
		6	1	4	4	B3
		8	1	2	2	B3

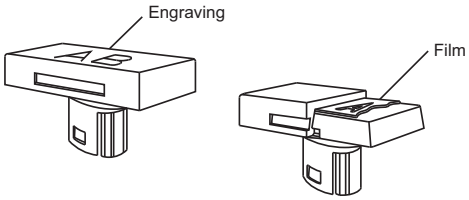

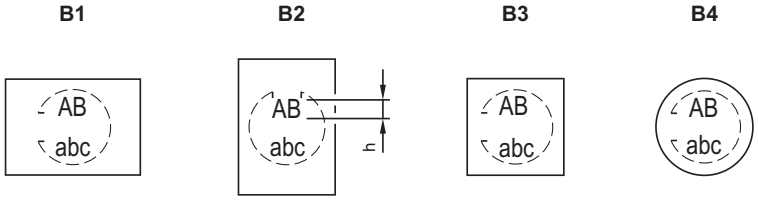

Engraving legend plates

All dimensions in mm

Height of letters h	Number of lines	Number of (target value) letters per line
3.0	1	11
3.0	2	11
4.0	1	7
8.0	1	4

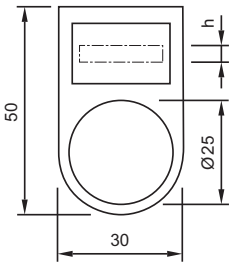

Component layout

1 Diode element page 33

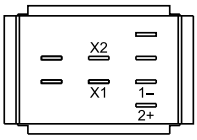

2 Diode element page 33

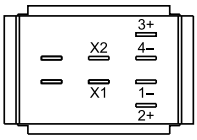

3 Lamp element page 33

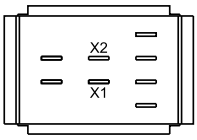

4 Switching element for Pushbutton | Keylock- and Selector switch 2 positions page 35

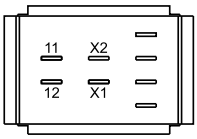

5 Switching element for Pushbutton | Keylock- and Selector switch 2 positions page 35

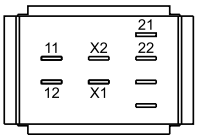

6 Switching element for Pushbutton | Keylock- and Selector switch 2 positions page 35

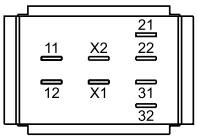

7 Switching element for Pushbutton | Keylock- and Selector switch 2 positions page 35

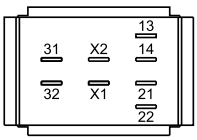

8 Switching element for Keylock- and Selector switch 3 positions page 36

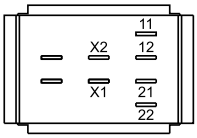

9 Switching element for Keylock- and Selector switch 3 positions page 36

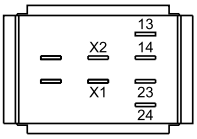

10 Switching element for Keylock- and Selector switch 3 positions page 36

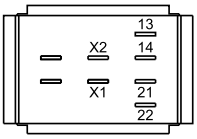

11 Switching element for Pushbutton | Keylock- and Selector switch 2 positions page 35

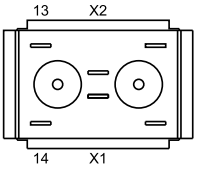

12 Switching element for Pushbutton | Keylock- and Selector switch 2 positions page 35

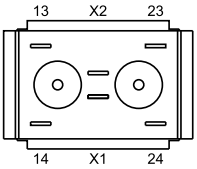

13 Switching element for Pushbutton | Keylock- and Selector switch 2 positions page 35

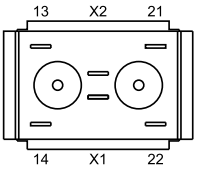

14 Switching element for Pushbutton | Keylock- and Selector switch 2 positions page 35

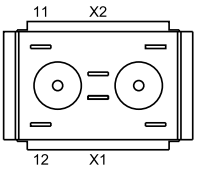

15 Switching element for Pushbutton | Keylock- and Selector switch 2 positions page 35

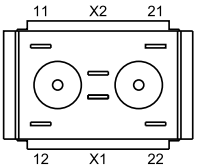

16 Switching element for Keylock- and Selector switch 3 positions page 36

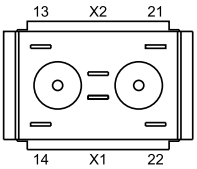

17 Switching element for Keylock- and Selector switch 3 positions page 36

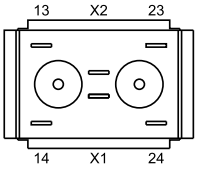

18 Switching element for Keylock- and Selector switch 3 positions page 36

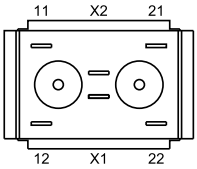

19 Switching element for Emergency-stop pushbutton, foolproof EN IEC 60947-5-5 page 36 **| Switching element for Stop pushbutton, foolproof** page 37

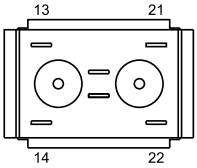

20 Switching element for Emergency-stop pushbutton, foolproof EN IEC 60947-5-5 page 36 **| Switching element for Stop pushbutton, foolproof** page 37

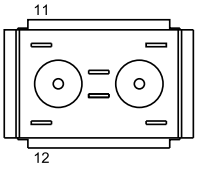

21 Switching element for Emergency-stop pushbutton, foolproof EN IEC 60947-5-5 page 36 **| Switching element for Stop pushbutton, foolproof** page 37

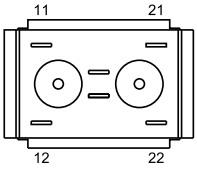

22 Switching element for Pushbutton | Keylock- and Selector switch 2 positions page 35

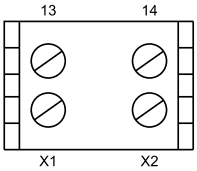

23 Switching element for Pushbutton | Keylock- and Selector switch 2 positions page 35

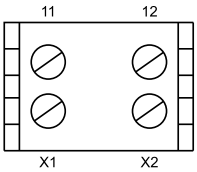

24 Switching element for Pushbutton | Keylock- and Selector switch 2 positions page 35

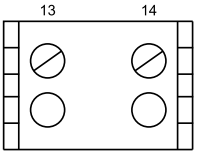

25 Switching element for Pushbutton | Keylock- and Selector switch 2 positions page 35 **| Switching element for Emergency-stop pushbutton, foolproof EN IEC 60947-5-5** page 36

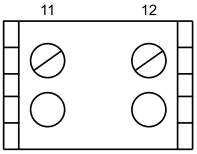

26 Switching element for Pushbutton | Keylock- and Selector switch 2 positions page 35 **| Switching element for Keylock- and Selector switch 3 positions** page 36 **| Switching element for Emergency-stop pushbutton, foolproof EN IEC 60947-5-5** page 36

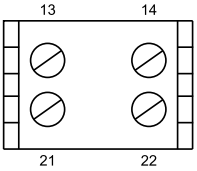

27 Switching element for Pushbutton | Keylock- and Selector switch 2 positions page 35 **| Switching element for Keylock- and Selector switch 3 positions** page 36

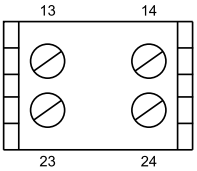

28 Switching element for Pushbutton | Keylock- and Selector switch 2 positions page 35

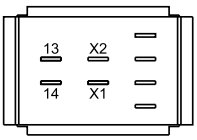

29 Switching element for Pushbutton | Keylock- and Selector switch 2 positions page 35 **| Switching element for Keylock- and Selector switch 3 positions** page 36 **| Switching element for Emergency-stop pushbutton, foolproof EN IEC 60947-5-5** page 36

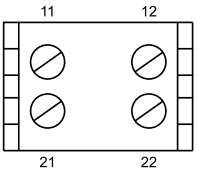

30 Flasher element page 34

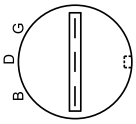

31 Lamp element page 33

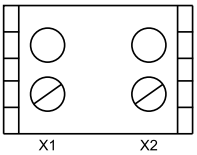

32 Switching element for Pushbutton | Keylock- and Selector switch 2 positions page 35

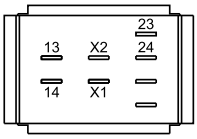

33 Switching element for Pushbutton | Keylock- and Selector switch 2 positions page 35

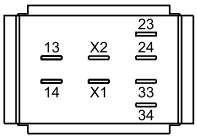

34 Switching element for Pushbutton | Keylock- and Selector switch 2 positions page 35

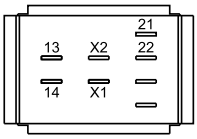

35 Switching element for Pushbutton | Keylock- and Selector switch 2 positions page 35

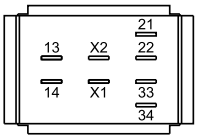

36 Switching element for Pushbutton | Keylock- and Selector switch 2 positions page 35

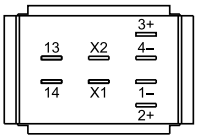

37 PCB plug-in base page 37

Drilling plan (Element side)
Through-connection recommended

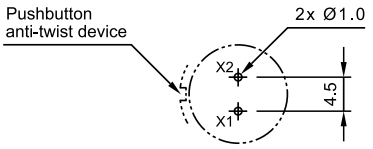

38 PCB plug-in base page 37

Drilling plan (Elementside)
Through-connection recommended

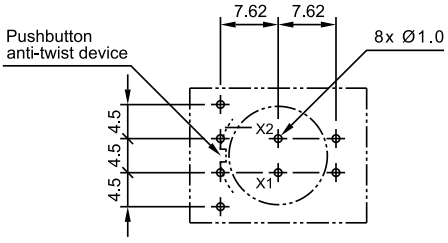

39 PCB plug-in base page 37

Drilling plan (Elementside)
Trough-connection recommended

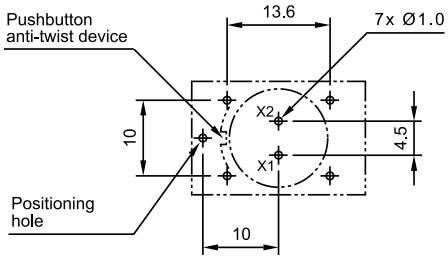

40 Potentiometer, flush mounting page 24

Rearview
Potentiometer terminals

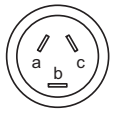

Conductor colour of flat ribbon cable
a = blue, b = red, c = yellow

Mounting dimensions

1 Emergency-stop pushbutton actuator, foolproof EN IEC 60947-5-5 page 13 **| Stop pushbutton actuator, foolproof** page 14 **| Mushroom-head pushbutton actuator** page 14

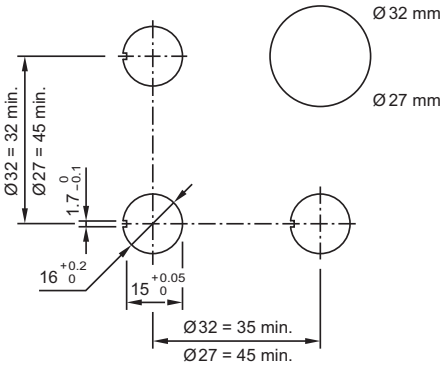

2 Mushroom-head pushbutton actuator, flush mounting page 20 **| Front bezel set for Mushroom-head pushbutton, flush mounting** page 30

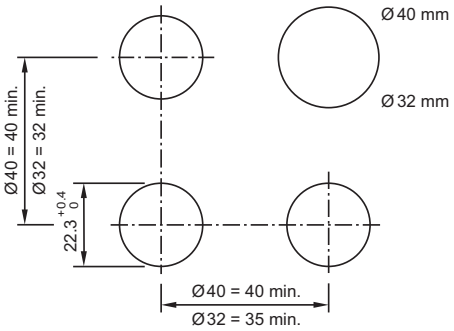

3 Indicator complete page 11 **| Indicator actuator** page 11 **| Illuminated pushbutton actuator** page 12 **| Keylock switch actuator 2 positions** page 15 **| Keylock switch actuator 3 positions** page 16 **| Selector switch actuator 2 positions** page 17 **| Selector switch actuator 3 positions** page 18 **| Blind plug, raised mounting** page 32

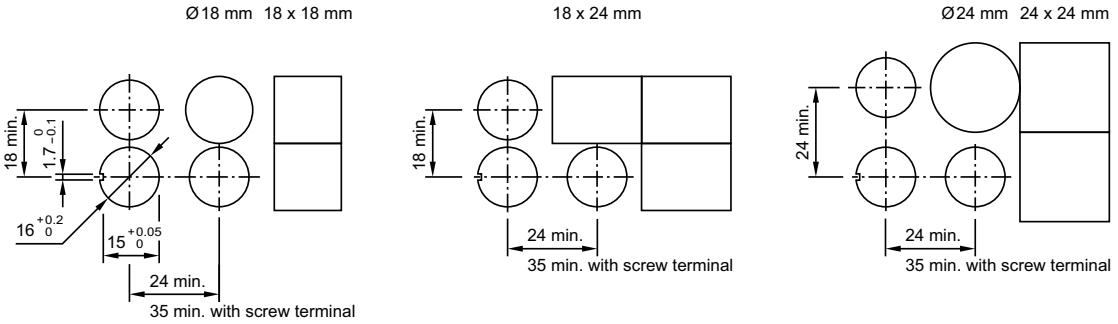

4 Indicator complete, flush mounting page 19 **| Indicator actuator, flush mounting** page 19 **| Illuminated pushbutton actuator, flush mounting** page 20 **| Keylock switch actuator 2 positions, flush mounting** page 21 **| Keylock switch actuator 3 positions, flush mounting** page 22 **| Selector switch actuator 2 positions, flush mounting** page 23 **| Selector switch actuator 3 positions, flush mounting** page 24 **| Potentiometer, flush mounting** page 24 **| Front bezel set for Indicators and Illuminated pushbutton, flush mounting** page 29 **| Front bezel set for Keylock switch, flush mounting** page 30 **| Front bezel set for Selector switch, flush mounting** page 31 **| Protective cover, flush mounting** page 32 **| Blind plug, flush mounting** page 32

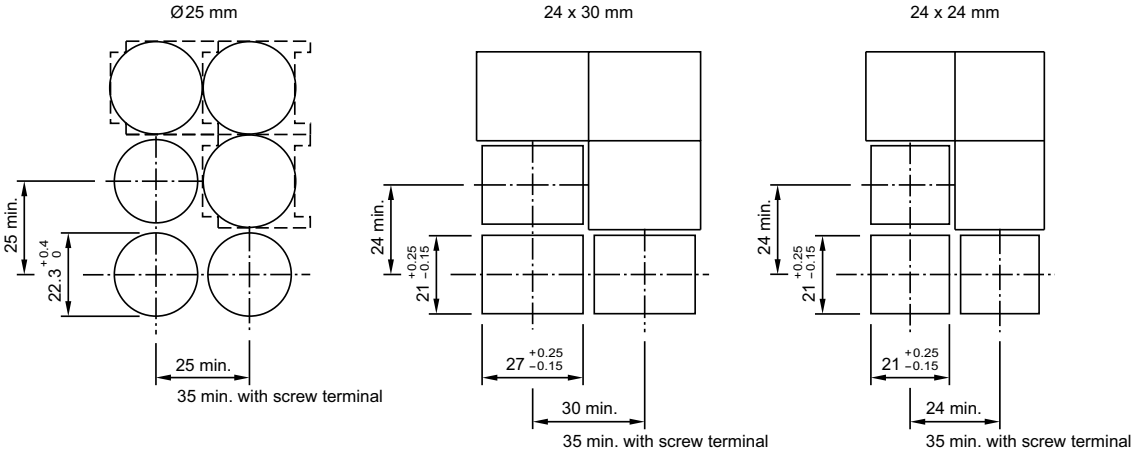

- Hole spacing min. 26 mm / min. 26 mm by using of the round front protective cap 84-9103.7
- Hole spacing min. 31 mm / min. 25 mm by using of the rectangular front protectice cap 61-9927.2

Technical drawing

1 Protective cover, raised mounting page 31

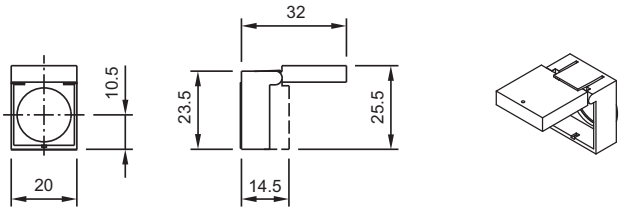

2 Protective cover, raised mounting page 31

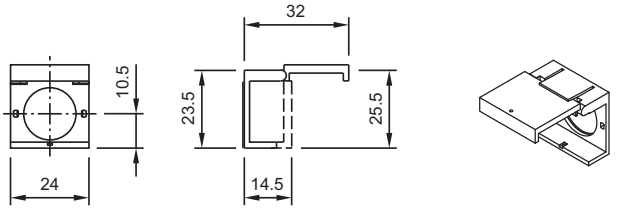

3 Indicator complete page 11

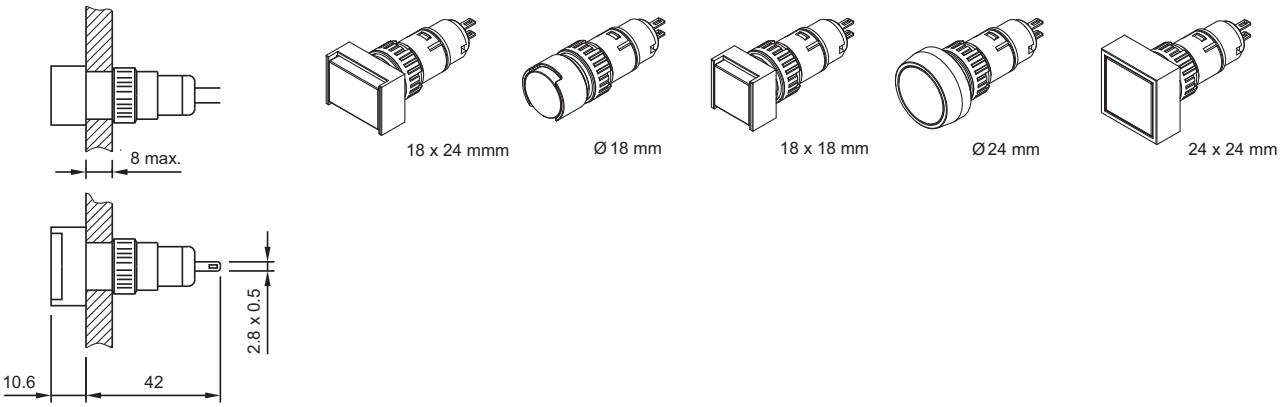

4 Indicator complete, flush mounting page 19

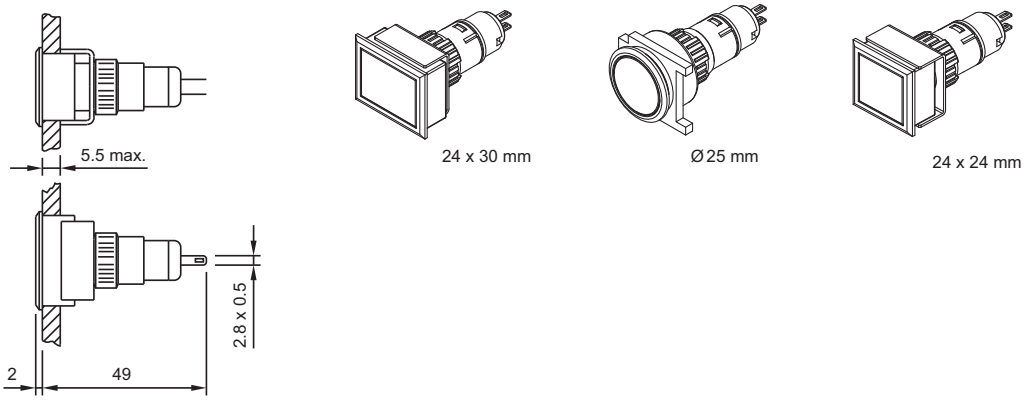

5 Protective cover, raised mounting page 31

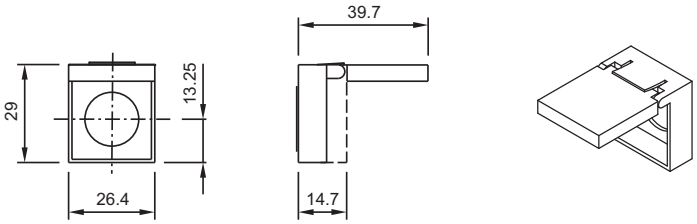

6 Protective cover, flush mounting page 32

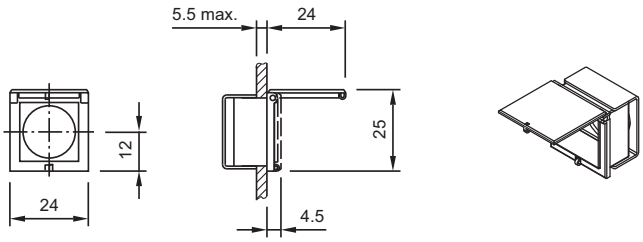

7 Protective cover, flush mounting page 32

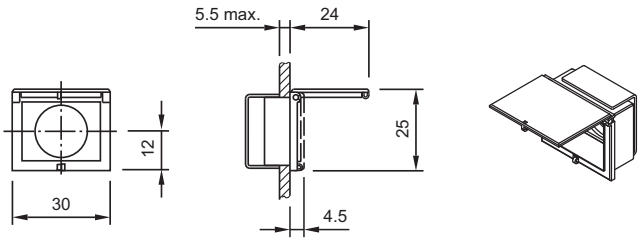

8 Protective cover, flush mounting page 32

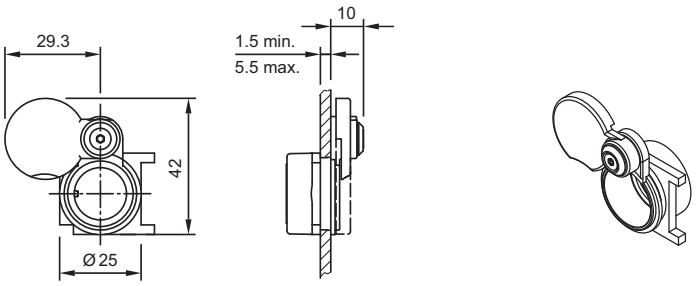

9 Potentiometer, flush mounting page 24

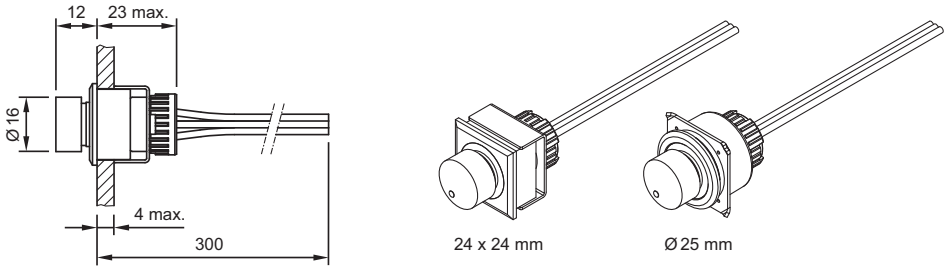

10 Legend frame page 28

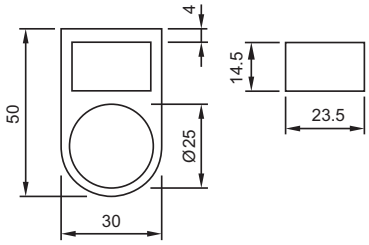

11 Emergency-stop protective shroud page 40

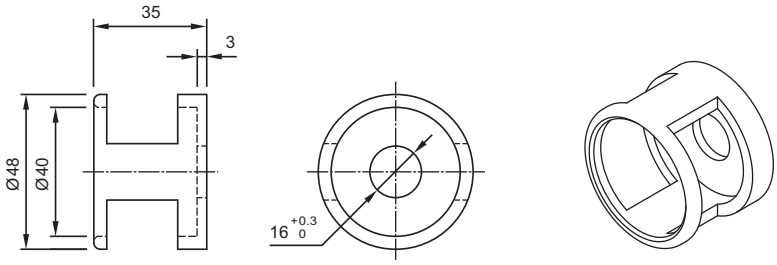

12 Emergency-stop enclosures page 40 **| Enclosure** page 42

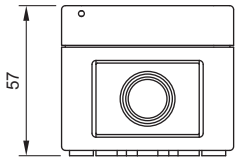

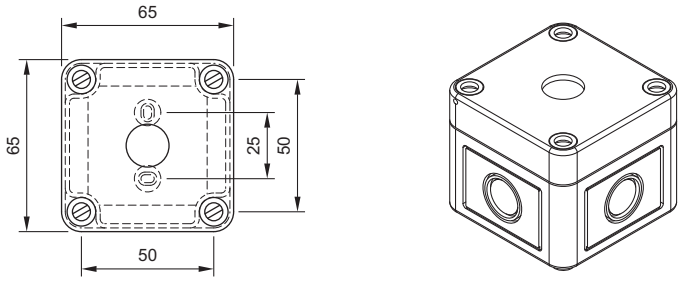

13 Blind plug, flush mounting page 32

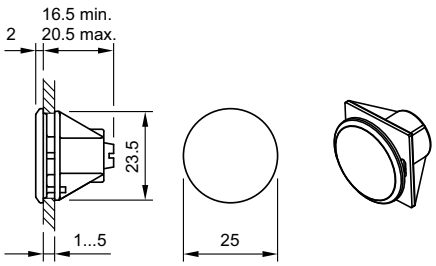

14 Indicator actuator page 11

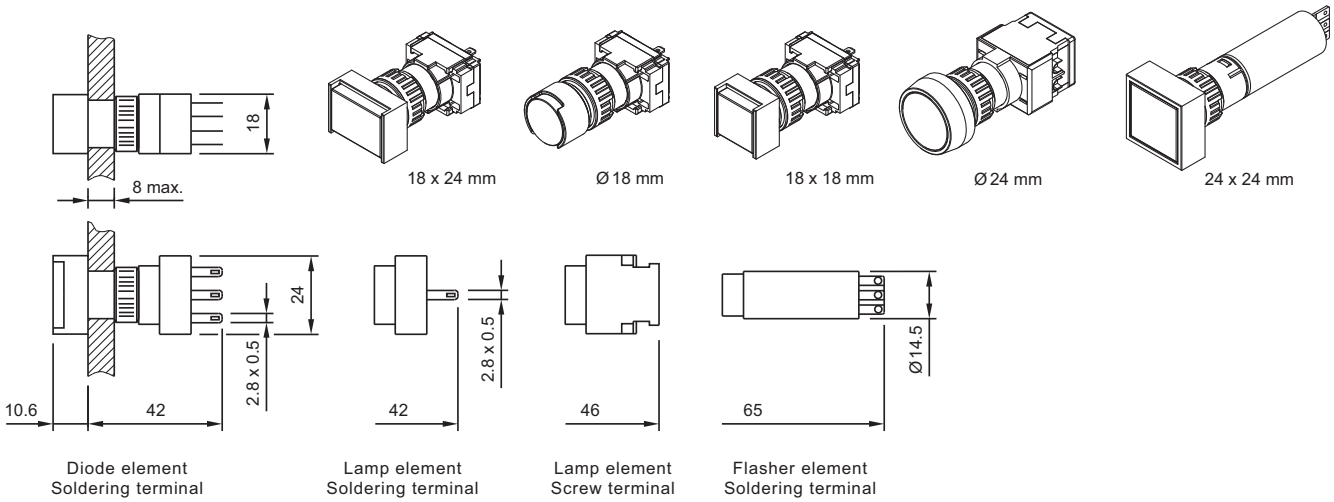

15 Mushroom-head pushbutton actuator page 14

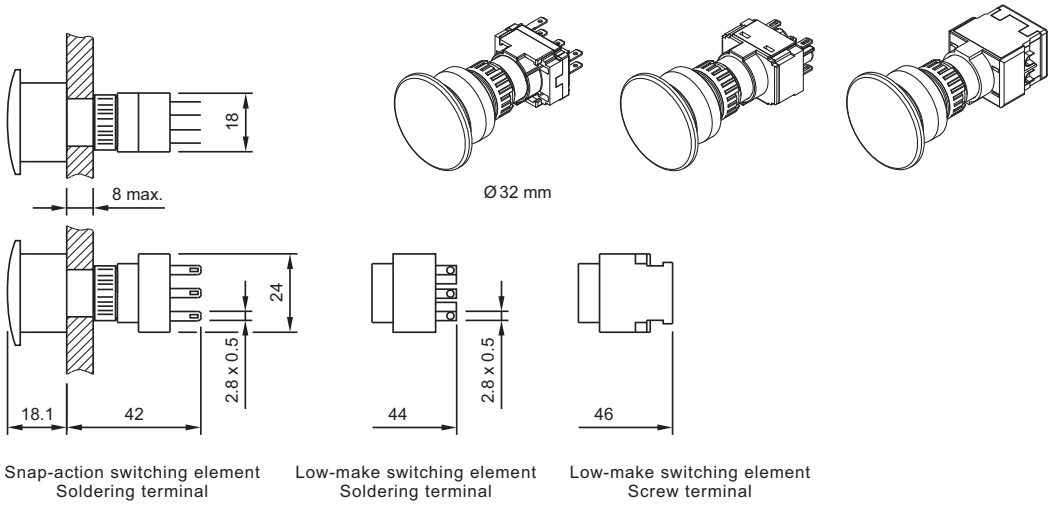

16 Illuminated pushbutton actuator page 12

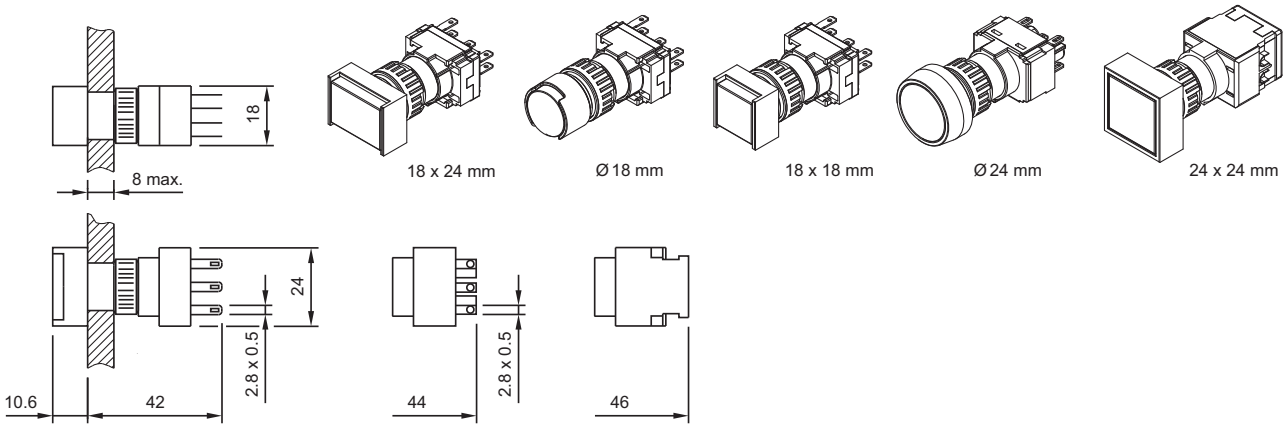

Snap-action switching element
Soldering terminal

Slow-make switching element
Soldering terminal

Slow-make switching element
Screw terminal

17 Keylock switch actuator 2 positions page 15 **| Keylock switch actuator 3 positions** page 16

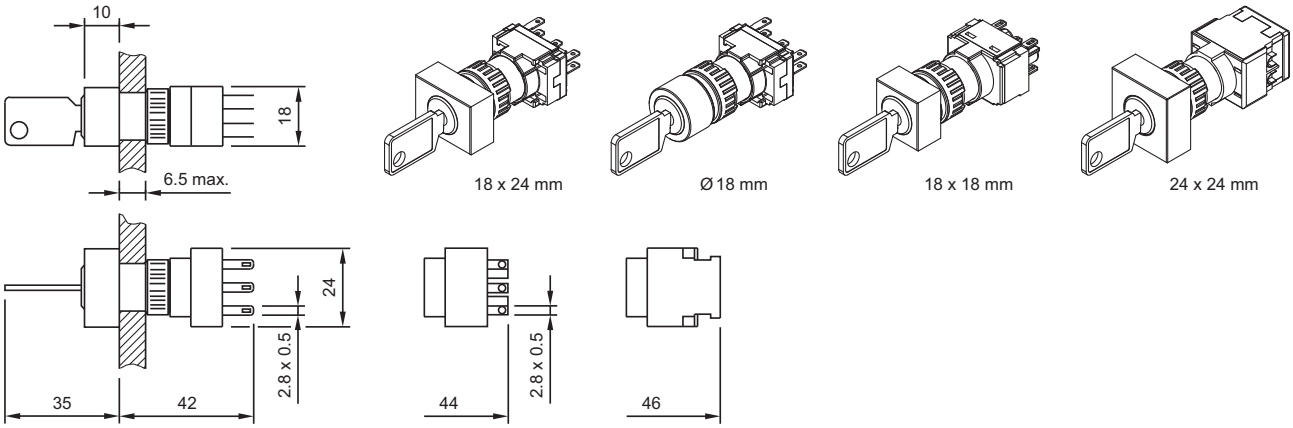

Snap-action switching element
Soldering terminal

Slow-make switching element
Soldering terminal

Slow-make switching element
Screw terminal

18 Selector switch actuator 2 positions page 17 **| Selector switch actuator 3 positions** page 18

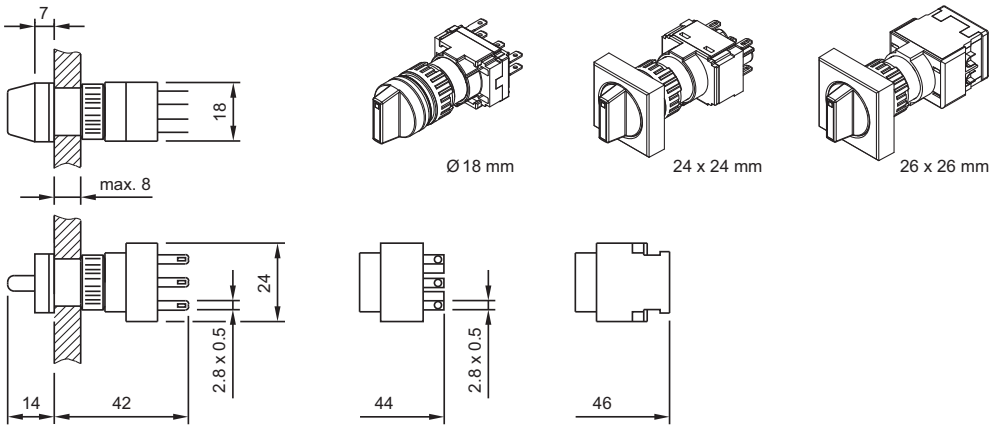

Snap-action switching element
Soldering terminal

Slow-make switching element
Soldering terminal

Slow-make switching element
Screw terminal

19 Emergency-stop pushbutton actuator, foolproof EN IEC 60947-5-5 page 13 **| Stop pushbutton actuator, foolproof** page 14

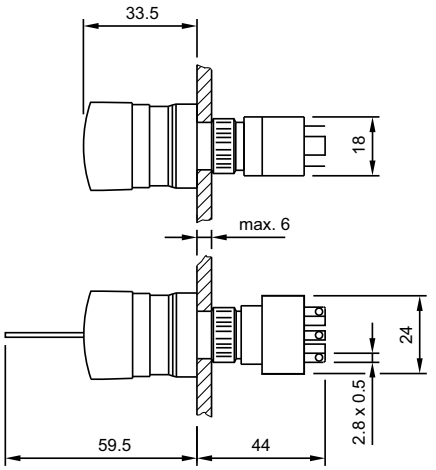

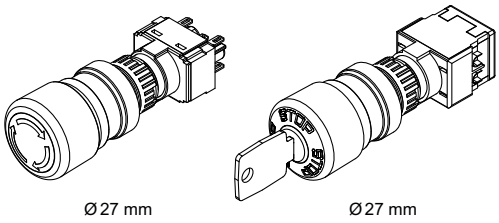

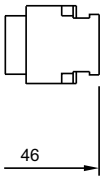

Slow-make switching element
Soldering terminal

Slow-make switching element
Screw terminal

20 Illuminated pushbutton actuator, flush mounting page 20

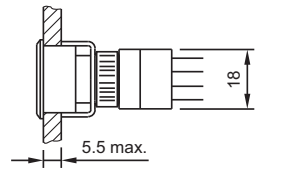

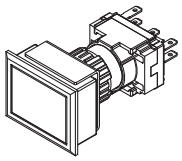

24 x 30 mm

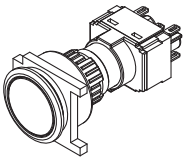

Ø 25 mm

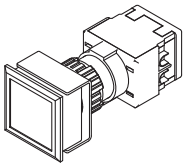

24 x 24 mm

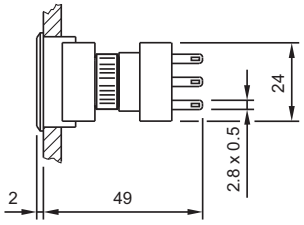

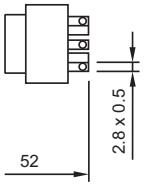

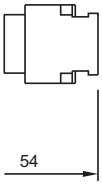

Snap-action switching element
Soldering terminal

Slow-make switching element
Soldering terminal

Slow-make switching element
Screw terminal

21 Indicator actuator, flush mounting page 19

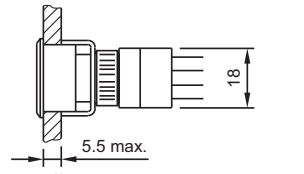

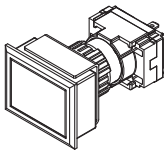

24 x 30 mm

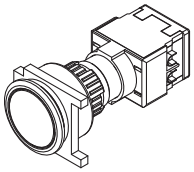

Ø 25 mm

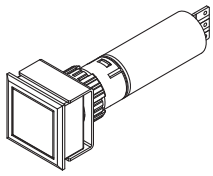

24 x 24 mm

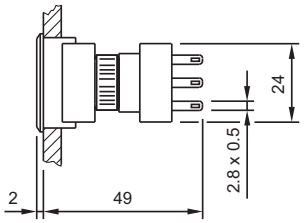

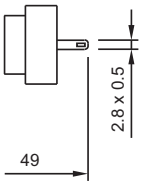

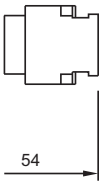

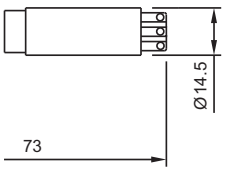

Diode element
Soldering terminal

Lamp element
Soldering terminal

Lamp element
Screw terminal

Flasher element
Soldering terminal

22 Keylock switch actuator 2 positions, flush mounting page 21 **| Keylock switch actuator 3 positions, flush mounting** page 22

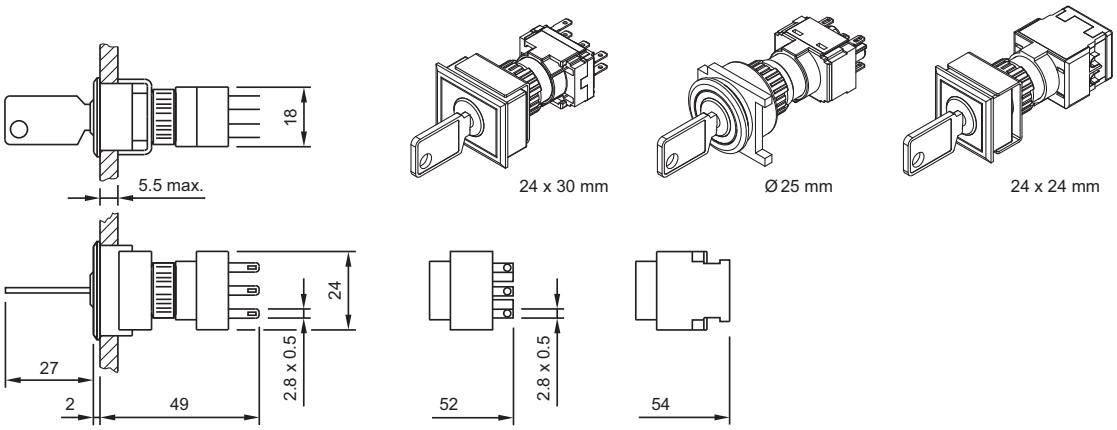

Snap-action switching element
Soldering terminal

Slow-make switching element
Soldering terminal

Slow-make switching element
Screw terminal

23 Selector switch actuator 2 positions, flush mounting page 23 **| Selector switch actuator 3 positions, flush mounting** page 24

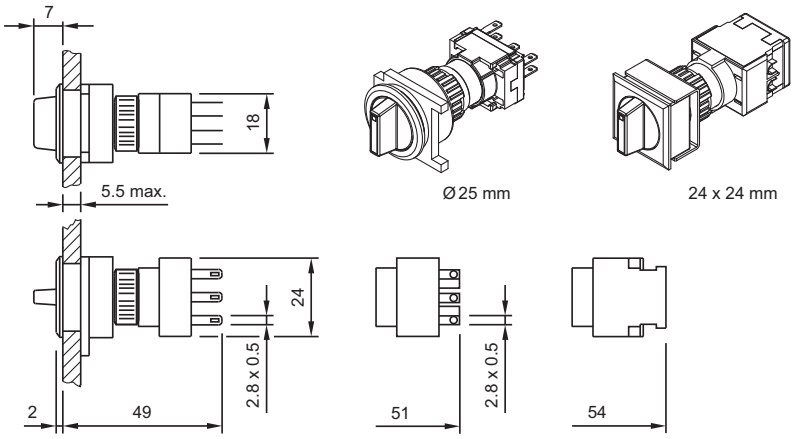

Snap-action switching element
Soldering terminal

Slow-make switching element
Soldering terminal

Slow-make switching element
Screw terminal

24 Mushroom-head pushbutton actuator, flush mounting page 20

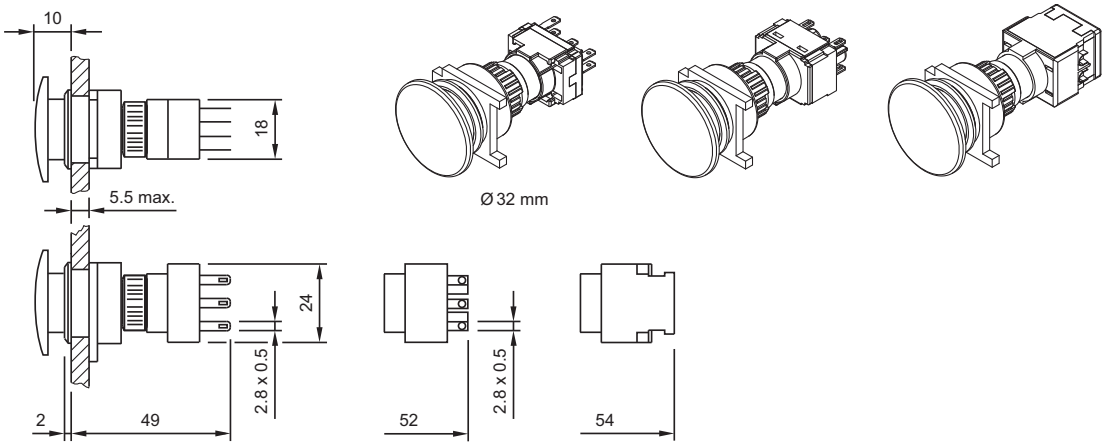

Snap-action switching element
Soldering terminal

Slow-make switching element
Soldering terminal

Slow-make switching element
Screw terminal

Circuit drawing

1 Potentiometer, flush mounting page 24

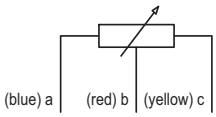

2 Mushroom-head pushbutton actuator page 14 **| Illuminated pushbutton actuator, flush mounting** page 20 **| Mushroom-head pushbutton actuator, flush mounting** page 20

3 Mushroom-head pushbutton actuator page 14 **| Illuminated pushbutton actuator, flush mounting** page 20 **| Mushroom-head pushbutton actuator, flush mounting** page 20

4 Indicator complete page 11 **| Indicator actuator** page 11 **| Indicator complete, flush mounting** page 19 **| Indicator actuator, flush mounting** page 19 **| Lamp element** page 33

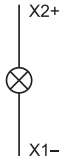

5 Emergency-stop pushbutton actuator, foolproof EN IEC 60947-5-5 page 13 **| Stop pushbutton actuator, foolproof** page 14

6 Illuminated pushbutton actuator page 12

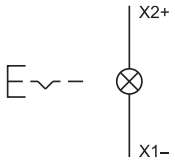

7 Selector switch actuator 2 positions page 17 **| Selector switch actuator 2 positions, flush mounting** page 23

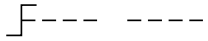

8 Selector switch actuator 2 positions page 17 **| Selector switch actuator 2 positions, flush mounting** page 23

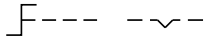

9 Selector switch actuator 3 positions page 18 **| Selector switch actuator 3 positions, flush mounting** page 24

10 Selector switch actuator 3 positions page 18 **| Selector switch actuator 3 positions, flush mounting** page 24

11 Selector switch actuator 3 positions page 18 **| Selector switch actuator 3 positions, flush mounting** page 24

12 Selector switch actuator 3 positions page 18 **| Selector switch actuator 3 positions, flush mounting** page 24

13 Illuminated pushbutton actuator page 12

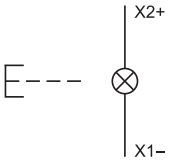

14 Keylock switch actuator 3 positions page 16 **| Keylock switch actuator 3 positions, flush mounting** page 22

15 Keylock switch actuator 3 positions page 16 **| Keylock switch actuator 3 positions, flush mounting** page 22

16 Keylock switch actuator 2 positions page 15 **| Keylock switch actuator 2 positions, flush mounting** page 21

17 Keylock switch actuator 2 positions page 15 **| Keylock switch actuator 2 positions, flush mounting** page 21

18 Keylock switch actuator 3 positions page 16 **| Keylock switch actuator 3 positions, flush mounting** page 22

19 Keylock switch actuator 3 positions page 16 **| Keylock switch actuator 3 positions, flush mounting** page 22

20 Diode element page 33

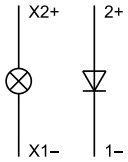

21 Diode element page 33

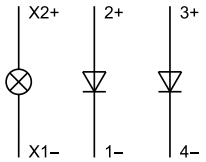

22 Switching element for Pushbutton | Keylock- and Selector switch 2 positions page 35

23 Switching element for Pushbutton | Keylock- and Selector switch 2 positions page 35

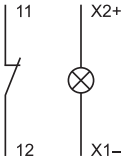

24 Switching element for Pushbutton | Keylock- and Selector switch 2 positions page 35 **| Switching element for Keylock- and Selector switch 3 positions** page 36

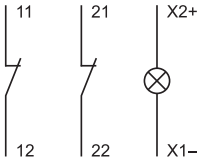

25 Switching element for Pushbutton | Keylock- and Selector switch 2 positions page 35

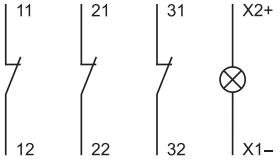

26 Switching element for Pushbutton | Keylock- and Selector switch 2 positions page 35

27 Switching element for Pushbutton | Keylock- and Selector switch 2 positions page 35

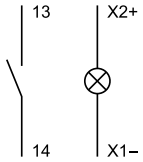

28 Switching element for Pushbutton | Keylock- and Selector switch 2 positions page 35

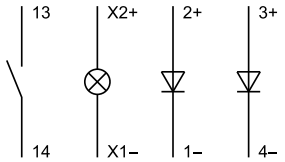

29 Switching element for Pushbutton | Keylock- and Selector switch 2 positions page 35

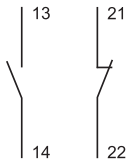

30 Switching element for Pushbutton | Keylock- and Selector switch 2 positions page 35 **| Switching element for Keylock- and Selector switch 3 positions** page 36

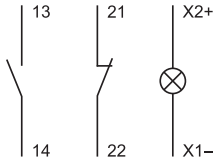

31 Switching element for Pushbutton | Keylock- and Selector switch 2 positions page 35

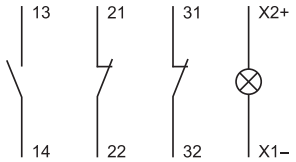

32 Switching element for Pushbutton | Keylock- and Selector switch 2 positions page 35

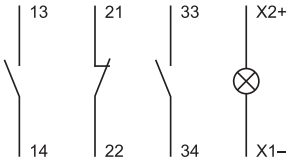

33 Switching element for Pushbutton | Keylock- and Selector switch 2 positions page 35 **| Switching element for Keylock- and Selector switch 3 positions** page 36

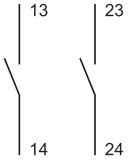

34 Switching element for Pushbutton | Keylock- and Selector switch 2 positions page 35 **| Switching element for Keylock- and Selector switch 3 positions** page 36

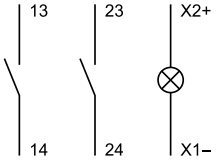

35 Switching element for Pushbutton | Keylock- and Selector switch 2 positions page 35

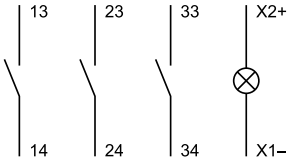

36 Switching element for Pushbutton | Keylock- and Selector switch 2 positions page 35 **| Switching element for Keylock- and Selector switch 3 positions** page 36 **| Switching element for Emergency-stop pushbutton, foolproof EN IEC 60947-5-5** page 36 **| Switching element for Stop pushbutton, foolproof** page 37

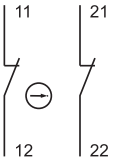

37 Switching element for Keylock- and Selector switch 3 positions page 36 **| Switching element for Emergency-stop pushbutton, foolproof EN IEC 60947-5-5** page 36 **| Switching element for Stop pushbutton, foolproof** page 37

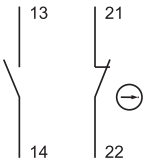

38 Switching element for Emergency-stop pushbutton, foolproof EN IEC 60947-5-5 page 36 **| Switching element for Stop pushbutton, foolproof** page 37

Index from Typ-Nr.

Typ-Nr.	Page
01-907	41
02-905	41
02-912.1	39
02-912.2	39
02-912.3	39
02-912.4	39
10-1306.1349	38
10-1307.1369	38
10-1309.1309	38
10-1310.1319	38
10-1311.1249	38
10-1312.1229	38
10-1313.1209	38
10-1313.1249	38
10-1316.1179	38
10-1316.1209	38
10-1319.1179	38
10-1319.1199	38
10-2J06.3142	39
10-2J06.3144	39
10-2J06.3145	39
10-2J06.3146	39
10-2J06.3149	39
10-2J09.1062	39
10-2J09.1064	39
10-2J09.1065	39
10-2J09.1066	39
10-2J09.1069	39
10-2J12.1062	39
10-2J12.1064	39
10-2J12.1065	39
10-2J12.1066	39
10-2J12.1069	39
10-2J13.1062	39
10-2J13.1064	39
10-2J13.1065	39
10-2J13.1066	39
10-2J13.1069	39
10-2J19.1042	39
10-2J19.1044	39
10-2J19.1045	39
10-2J19.1046	39
10-2J19.1049	39
14-987.1001	33
31-929	38
31-946	37
31-985.0	33
31-989.300	32
31-989.311	33
31-991	40
51-910	41
51-920	31
51-925	31
51-943.1	37
51-943.9	42
51-947.0	32
51-948.0	32
51-949.0	32
52-928.0	28
52-928.20	28
52-928.30	28
52-928.40	28
52-928.50	28
52-928.60	28
52-928.9	28
52-929.20	28
52-929.30	28
52-929.40	28
52-929.50	28
52-929.60	28
52-929.8	28
52-929.9	28
52-950.0	29
52-952.0	29
61-0000.02	19
61-0009.0	19
61-0010.02	11
61-0019.0	11
61-0020.02	11
61-0029.0	11
61-0030.02	11
61-0039.0	11
61-0040.02	11
61-0049.0	11
61-0050.02	11
61-0059.0	11
61-1100.0	20
61-1100.0	20
61-1110.0	12
61-1120.0	12
61-1130.0	12
61-1140.0	12
61-1140.0	14
61-1150.0	12
61-1200.0	20
61-1200.0	20
61-1210.0	12
61-1220.0	12
61-1230.0	12
61-1240.0	12
61-1240.0	14
61-1250.0	12
61-1300.0	20
61-1300.0	20
61-1310.0	12
61-1320.0	12
61-1330.0	12
61-1350.0	12
61-2101.0/D	15
61-2101.0/D	21
61-2201.0/D	15
61-2201.0/D	21
61-2203.0/D	15
61-2203.0/D	21
61-2205.0/D	15
61-2205.0/D	21
61-2501.0/D	16
61-2501.0/D	22
61-2601.0/D	16
61-2601.0/D	22
61-2602.0/D	16
61-2602.0/D	22
61-2603.0/D	16
61-2603.0/D	22
61-2604.0/D	16
61-2604.0/D	22
61-2605.0/D	16
61-2605.0/D	22
61-2606.0/D	16
61-2606.0/D	22
61-2607.0/D	16
61-2607.0/D	22
61-2701.0/D	16
61-2701.0/D	22
61-2703.0/D	16
61-2703.0/D	22
61-2705.0/D	16
61-2705.0/D	22
61-2801.0/D	16
61-2801.0/D	22
61-2802.0/D	16
61-2802.0/D	22
61-2804.0/D	16
61-2804.0/D	22
61-3440.4/1	13
61-3440.4/1S	13
61-3440.4/2	13
61-3440.4/5	13
61-3440.4/8	14
61-3440.4/D	13
61-4110.0	17
61-4110.0	23
61-4210.0	17
61-4210.0	23
61-4510.0	18
61-4510.0	24
61-4610.0	18
61-4610.0	24
61-4710.0	18
61-4710.0	24
61-4810.0	18
61-4810.0	24
61-4970.10	24
61-4970.13	24
61-5441.0/KA	14
61-5441.4/K	13
61-8000.05	34
61-8006.01	33
61-8006.02	33
61-8101.02	33
61-8102.02	33
61-8212.12	35
61-8212.22	35
61-8410.12	35
61-8410.22	35
61-8420.12	35
61-8420.22	35
61-8430.12	35
61-8430.22	35
61-8440.12	35
61-8440.22	35
61-8450.12	35
61-8450.22	35
61-8460.12	35
61-8460.22	35
61-8470.12	35
61-8470.22	35
61-8480.12	35
61-8480.22	35

Index from Typ-Nr.

Typ-Nr.	Page
61-8490.12	35
61-8490.22	35
61-8520.12	36
61-8520.22	36
61-8550.12	36
61-8550.22	36
61-8574.12	36
61-8574.22	36
61-8610.11	35
61-8610.17	35
61-8610.37	35
61-8615.11	35
61-8620.17	35
61-8620.37	35
61-8625.11	35
61-8640.11	35
61-8640.17	35
61-8640.37	35
61-8645.11	35
61-8650.17	35
61-8650.37	35
61-8655.11	35
61-8670.17	35
61-8670.37	35
61-8675.11	35
61-8720.17	36
61-8720.37	36
61-8725.11	36
61-8745.11	36
61-8745.17	36
61-8745.37	37
61-8750.17	36
61-8750.37	36
61-8755.11	36
61-8755.11	36
61-8755.17	36
61-8755.37	37
61-8770.17	36
61-8770.37	36
61-8775.11	36
61-8775.11	36
61-8775.17	36
61-8775.37	37
61-9028.0	28
61-9028.20	28
61-9028.30	28
61-9028.40	28
61-9028.50	28
61-9028.60	28
61-9028.9	28
61-9029.20	28
61-9029.30	28
61-9029.40	28
61-9029.50	28
61-9029.60	28
61-9029.8	28
61-9029.9	28
61-9210.0	27
61-9210.0	27
61-9211.0	25
61-9211.8	25
61-9211.9	25
61-9220.0	27

Typ-Nr.	Page
61-9220.0	27
61-9221.0	25
61-9221.8	25
61-9221.9	25
61-9226.0	25
61-9226.8	25
61-9226.9	25
61-9230.0	27
61-9230.0	27
61-9231.0	25
61-9231.8	25
61-9231.9	25
61-9236.0	25
61-9236.8	25
61-9236.9	25
61-9250.0	27
61-9251.0	25
61-9251.8	25
61-9251.9	25
61-9311.1	25
61-9311.2	25
61-9311.3	25
61-9311.4	25
61-9311.5	25
61-9311.6	25
61-9311.7	25
61-9321.1	25
61-9321.2	25
61-9321.3	25
61-9321.4	25
61-9321.5	25
61-9321.6	25
61-9321.7	25
61-9326.2	25
61-9326.3	25
61-9326.4	25
61-9326.5	25
61-9326.6	25
61-9326.7	25
61-9331.1	25
61-9331.2	25
61-9331.3	25
61-9331.4	25
61-9331.5	25
61-9331.6	25
61-9331.7	25
61-9336.2	25
61-9336.3	25
61-9336.4	25
61-9336.5	25
61-9336.6	25
61-9336.7	25
61-9351.1	25
61-9351.2	25
61-9351.3	25
61-9351.4	25
61-9351.5	25
61-9351.6	25
61-9351.7	25
61-9450.0	32
61-9451.0	32
61-9452.0	32
61-9453.0	32

Typ-Nr.	Page
61-9480.5	40
61-9480.6	42
61-9481.6	40
61-9481.6	42
61-9593.0	27
61-9593.2	27
61-9593.4	27
61-9593.5	27
61-9600.0	31
61-9600.1	31
61-9642.1	25
61-9642.1	25
61-9642.2	25
61-9642.2	25
61-9642.3	25
61-9642.3	25
61-9642.4	25
61-9642.4	25
61-9642.5	25
61-9642.5	25
61-9642.6	25
61-9642.6	25
61-9642.7	25
61-9642.7	25
61-9643.201	26
61-9643.202	26
61-9643.203	26
61-9643.301	26
61-9643.401	26
61-9643.501	26
61-9643.502	26
61-9643.503	26
61-9643.601	26
61-9643.602	26
61-9643.603	26
61-9643.701	26
61-9643.702	26
61-9643.703	26
61-9671.1	25
61-9671.2	25
61-9671.3	25
61-9671.4	25
61-9671.5	25
61-9671.6	25
61-9671.7	25
61-9681.1	25
61-9681.2	25
61-9681.3	25
61-9681.4	25
61-9681.5	25
61-9681.6	25
61-9681.7	25
61-9707.7	26
61-9711.0	42
61-9730.0	41
61-9740.0	41
61-9771.0	25
61-9771.8	25
61-9771.9	25
61-9781.0	25
61-9781.8	25
61-9781.9	25
61-9820.1	37

Index from Typ-Nr.

Typ-Nr.	Page
61-9821.1	37
61-9823	37
61-9830	37
61-9830.2	38
61-9831.2	38
61-9841.0	27
61-9841.0A	26
61-9841.2	27
61-9841.2A	26
61-9841.4	27
61-9841.4A	26
61-9841.5	27
61-9841.5A	26
61-9841.6	27
61-9841.6A	26
61-9841.8	27
61-9841.8A	26
61-9842.0	27
61-9842.2	27
61-9842.4	27
61-9842.5	27
61-9842.6	27
61-9842.8	27
61-9912.0	41
61-9915.0	40
61-9920.0	31
61-9921.0	32
61-9922.0	32
61-9924.0	32
61-9927.2	31
61-9930.0	29
61-9930.0	30
61-9930.4	29
61-9930.4	30
61-9931.0	29
61-9931.0	30
61-9931.4	29
61-9931.4	30
61-9932.0	30
61-9932.0	31
61-9932.1	30
61-9932.1	31
61-9932.10	30
61-9932.10	31
61-9932.2	30
61-9932.2	31
61-9932.4	30
61-9932.4	31
61-9932.5	30
61-9932.5	31
61-9932.6	30
61-9932.6	31
61-9933.0	29
61-9933.0	30
61-9933.1	29
61-9933.1	30
61-9933.10	29
61-9933.10	30
61-9933.2	29
61-9933.2	30
61-9933.4	29
61-9933.4	30
61-9933.5	29
61-9933.5	30
61-9933.6	29
61-9933.6	30
61-9934.8	30
61-9936.0	31
61-9960	41
61-9965	40
61-9970.0	39
61-9970.1	39
61-9970.2	39
61-9970.3	39
61-9970.6	39
61-9980.0	28
704.945.6	40
704.945.6	42
704.968.0	29
704.968.1	29
84-9103.7	31
K61-999.100	41

EAO AG
Tannwaldstrasse 88
4601 Olten, Switzerland

E-mail info@eao.com
Website www.eao.com

Austria
Phone +49 201 85 87 0
Fax +49 201 85 87 210
E-mail sales.ede@eao.com

Belgium
Phone +32 3 777 82 36
Fax +32 3 777 84 19
E-mail sales.ebl@eao.com

China
Phone +852 27 86 91 41
Fax +852 27 86 95 61
E-mail sales.ehk@eao.com

France
Phone +33 1 64 43 37 37
Fax +33 1 64 43 37 49
E-mail sales.ese@eao.com

Germany
Phone +49 201 85 87 0
Fax +49 201 85 87 210
E-mail sales.ede@eao.com

Italy
Phone +39 035 481 0189
Fax +39 035 481 3786
E-mail sales.eit@eao.com

Japan
Phone +81 3 5444 5411
Fax +81 3 5444 0345
E-mail sales.esj@eao.com

Netherlands
Phone +31 78 653 17 00
Fax +31 78 653 17 99
E-mail sales.enl@eao.com

Sweden
Phone +46 8 683 86 60
Fax +46 8 724 29 12
E-mail sales.esw@eao.com

Switzerland
Phone +41 62 388 95 00
Fax +41 62 388 95 55
E-mail sales.ech@eao.com

United Kingdom
Phone +44 1444 236 000
Fax +44 1444 236 641
E-mail sales.euk@eao.com

USA
Phone +1 203 877 4577
Fax +1 203 877 3694
E-mail sales.eus@eao.com

Other Countries
Phone +41 62 286 92 10
Fax +41 62 296 21 62
E-mail info@eao.com

EAO reserves the right to alter specifications without further notice

eao