| LEADED PRODUCT NUMBER | AS AVAILABLE |
|---|---|
| 54112–XXX–XX–XXXX | |

RoHs COMPATIBLE PRODUCT NUMBER
54112–XXXXXXXXXLF

PLATING

1 = 0.76µm GOLD/GXT ON CONTACT AREA
2µm MIN MATTE TIN ON TAIL
OVER 1.27µm Ni MIN

4 = 2µm MIN MATTE TIN
OVER 1.27µm Ni MIN

5 = 0.25µm GOLD/GXT ON CONTACT AREA
2µm MIN MATTE TIN ON TAIL
OVER 1.27µm Ni MIN

8 = 0.38µm GOLD/GXT ON CONTACT AREA
2µm MIN MATTE TIN ON TAIL
OVER 1.27µm Ni MIN

RoHS COMPATIBLE
SEE NOTE 8

STACK HEIGHT, NOTE 6

TOTAL NB OF POSITIONS
04 TO 72

| OAL | PIN STYLE |
|---|---|
| 13.5 | 02 |
| 15.9 | 03 |
| 16.56 | 15 |
| 16.76 | 04 |
| 17.65 | 05 |
| 18.91 | 06 |
| 20.50 | 28 |
| 20.96 | 07 |
| 21.25 | 19 |
| 23.5 | 08 |
| 26.04 | 09 |
| 26.42 | 14 |
| 28.00 | 18 |
| 28.58 | 10 |
| 30.48 | 20 |
| 31.12 | 11 |
| 32.15 | 21 |
| 33.66 | 12 |
| 34.00 | 13 |
| 36.20 | 16 |
| 37.30 | 22 |
| 38.40 | 23 |
| 42.30 | 24 |
| 43.00 | 25 |
| 47.00 | 26 |
| 52.00 | 27 |

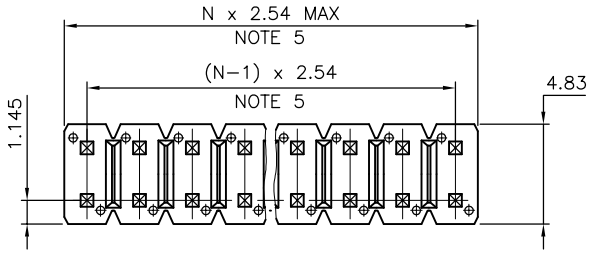


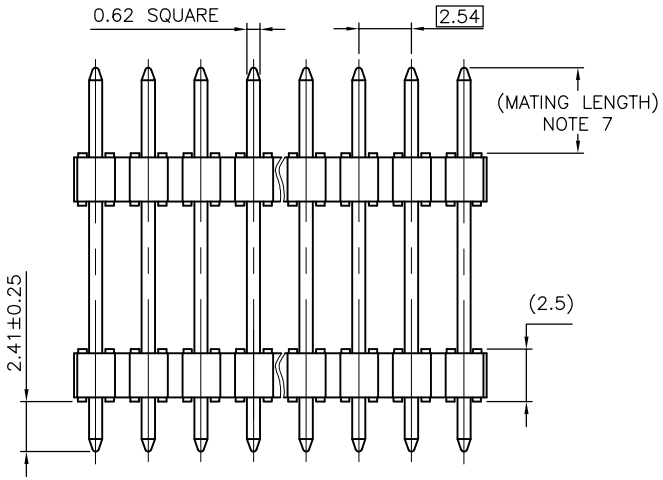


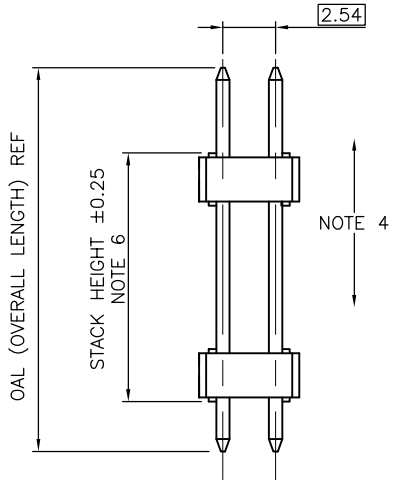


NOTES:

1. HOUSING MAT'L : HIGH TEMPERATURE THERMOPLASTIC. UL94V–0 COLOR: BLACK
2. PIN MATERIAL : PHOSPHOR BRONZE
3. STANDARD PACKAGING IN POLYBAG
4. 9N MIN RETENTION IN EITHER DIRECTION
5. TO DETERMINE DIMENSIONS :
   N = NUMBER OF POSITIONS PER ROW
   EXAMPLE : 8 POS PER ROW, N x 2.54 = 20.32mm
6. XXXX = MILLIMETERS
   SPECIFY MILLIMETERS
   5.0mm MIN TO 45.0mm MAX AVAILABLE
   IN 0.5mm INCREMENT
   EXAMPLE FOR STACK HEIGHT: 1 2 7 5 = 12.75mm
7. MATING LENGTH = (OAL)–(2.41)–(STACK HEIGHT)
8. RoHS COMPATIBLE PRODUCT SPECIFICATIONS
   a – PLATING:
   – "LF" MEANS THE PRODUCT IS LEAD–FREE, 2µm MINIMUM MATTE TIN OVER 1.27µm MINIMUM NICKEL UNDERPLATE.
   b – MANUFACTURING PROCESS COMPATIBILITY
   – THE HOUSING WILL WITHSTAND EXPOSURE TO 260°C ±5°C SOLDER BATH TEMPERATURE FOR 5 SECONDS IN A WAVE SOLDER APPLICATION WITH A 1.6mm MIN THICK CIRCUIT BOARD.
   c – LABELLING:
   – MEETS PACKAGING SPECS AS PER GS–14–920
   d – THIS PRODUCT MEETS EUROPEAN UNION DIRECTIVES AND OTHER COUNTRY REGULATIONS AS DESCRIBED IN GS–47–0004.

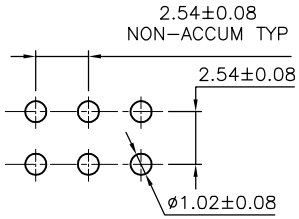


RECOMMENDED HOLE PATTERN

| mat'l. code | surface | tolerance | projection | product family |
|---|---|---|---|---|
| SEE NOTES | ISO 1302 | ISO 406 ISO 1101 | | BERGSTIK |

| ltr | ecn no | dr | date |
|---|---|---|---|
| H | B–15647 | LMU | 13.02.14 |
| J | B–18962 | LMU | 14.09.29 |
| K | B–19782 | AMA | 14.12.16 |
| E | F06–0196 | LMU | 06.06.13 |
| F | F08–0148 | RTR | 08.03.31 |
| G | F09–0009 | JCO | 09.02.16 |

tolerances unless otherwise specified: angles; linear x.x ±0.3, x.xx ±0.13, x.xxx ±0.05

| | | |
|---|---|---|
| dr | LMU | 01.01.24 |
| engr | JCO | 01.01.24 |
| chr | JCO | 01.01.24 |
| appd | JCO | 01.01.24 |

mm
scale 4:1

title: UNSHR.HEADER
STR DR TMT

dwg no 54112 — sheet 1 of 1 — size A3
type CUSTOMER Drawing

sheet index — revision sheet

form: A3

FCIconnect.com
Copyright FCI