PART NAME	SERIES 30 UPRIGHT CABINET RACK	PART No.	30-2300 TO 30-2306	REV. DATE	1-2-02

FINISH:
FRAME ASSEMBLY, DOOR, SIDES, TOP COWLS & TOP COVER ____ GRAY TEXTURE OR ROYAL BLUE TEXTURE
PANEL MOUNTING RAILS ____ SMOOTH BLACK

MATERIAL:
PANEL MOUNTING RAILS ____ 12 GA. STEEL
FRAME TOP, BASE ASSEMBLY, FILLERS & VERTICAL RAILS ____ 14 GA. STEEL
RAIL SUPPORTS ____ 16 GA. STEEL
TOP COWLS, TOP COVER & SIDES ____ 18 GA. STEEL
DOOR ____ 20 GA. STEEL

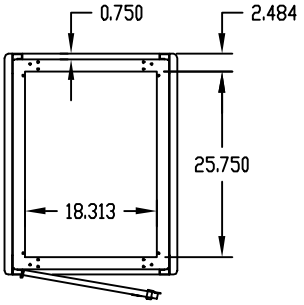

TOP VIEW
(LESS TOP COVER & TOP COWLS)

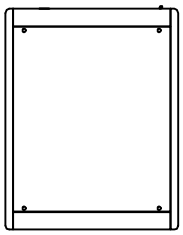

TOP VIEW

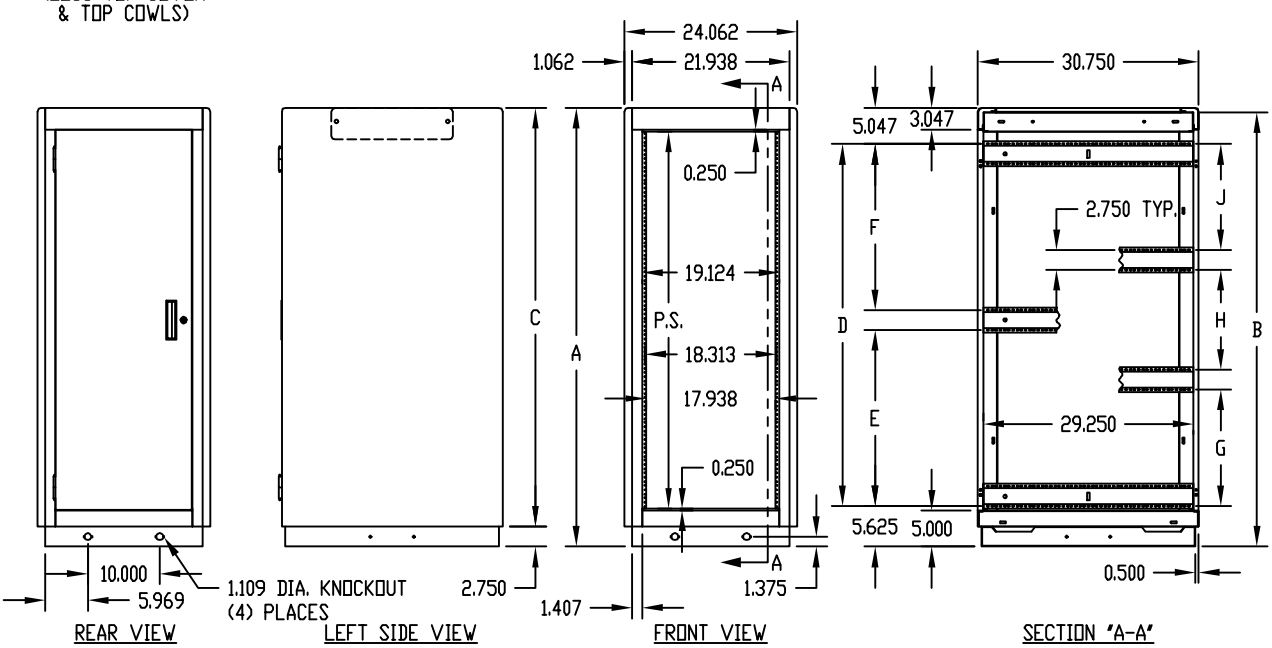

REAR VIEW | LEFT SIDE VIEW | FRONT VIEW | SECTION "A-A"

PANEL MOUNTING RAILS (FRONT & REAR) ARE TAPPED #10-32 ON E.I.A. UNIVERSAL SPACING AND ARE FULLY ADJUSTABLE.

BOTTOM PIERCED FOR MOUNTING RC-7758 CASTERS.

LOAD RATING: 1200 LBS. MAX.

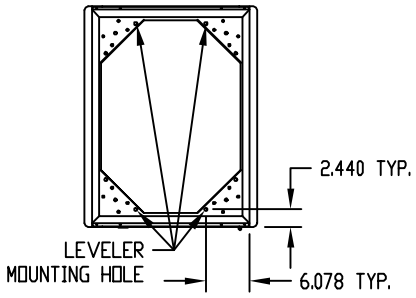

BOTTOM VIEW

PART No.	P.S.	A	B	C	D	E	F	G	H	J
30-2300	21.000	29.625	29.000	26.875	18.937	—	—	—	—	—
30-2301	31.500	40.125	39.500	37.375	29.437	—	—	—	—	—
30-2302	42.000	50.625	50.000	47.875	—	19.281	17.906	—	—	—
30-2303	52.500	61.125	60.500	58.375	—	24.531	23.156	—	—	—
30-2304	61.250	69.875	69.250	67.125	—	28.906	27.531	—	—	—
30-2305	70.000	78.625	78.000	75.875	—	33.281	31.906	—	—	—
30-2306	78.750	87.375	86.750	84.625	—	—	—	25.125	22.312	23.750