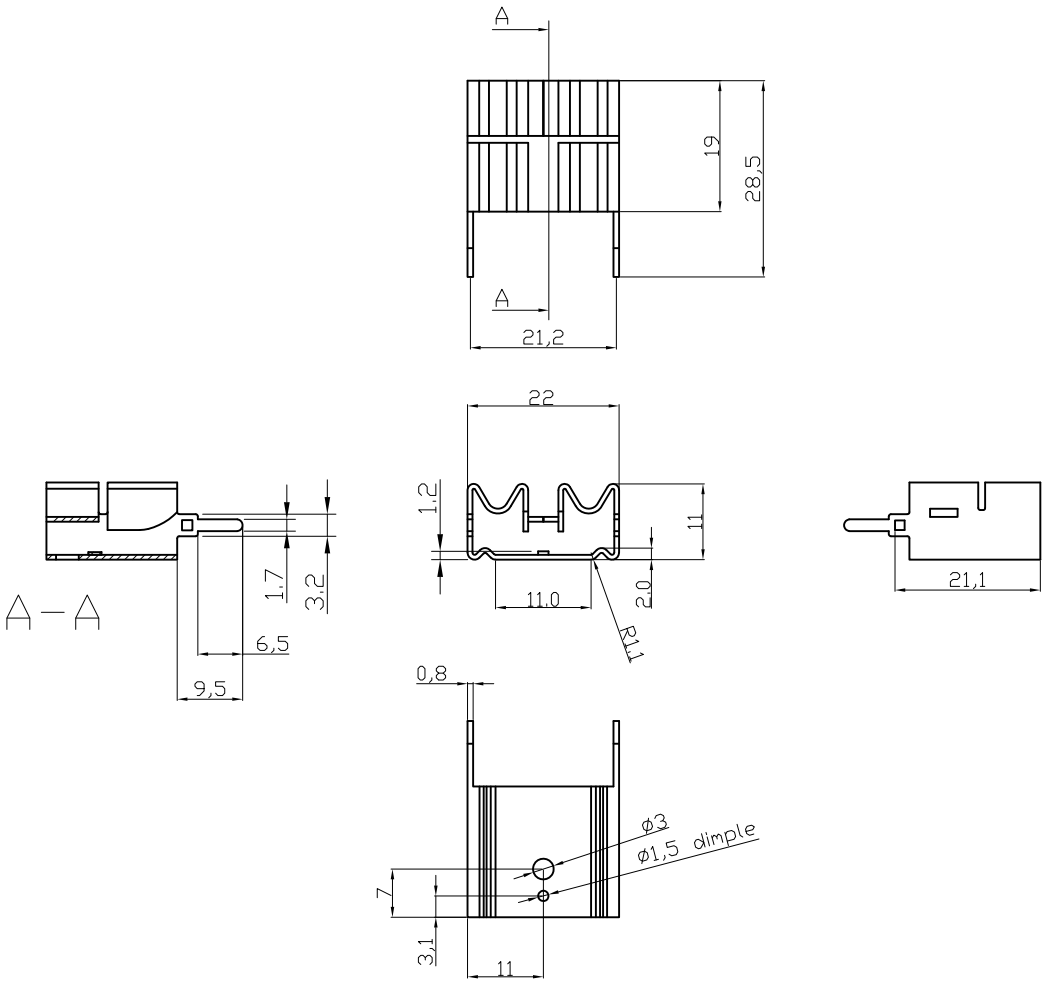

Notes
Material : AL 5052 T=0.8mm

Option	Vrsion	Thermal resistance(K/W)
V2012B	Black Anodize	21
V2012SN	Tin plated	21

RoHS compliant

Scale	FREE						Date	Name
TOLERANCE						Drawn	11.08.2009	Dean
UNIT	±0.2					Approved	11.08.2009	Andy
DIM	TOL							
X.°	±X°							
X.X°	±X°	1	Drawn	11.08.2009	Dean			
Angle	TOL	Id.	Modification	Date	Name			

Customer-No.

ASSMANN WSW-No. V2012x

Drawing-No. ASS 0862 HS rev01

Replace Sheet

ASSMANN WSW components