Modular Type
Filter Regulators
Series AW

	Model	Port size	Options
Filter Regulator Series AW **Pages 366 through to 377**	**AW10**	M5 x 0.8	Bracket Float type auto drain Square embedded type pressure gauge (except the AW10) Round type pressure gauge Digital pressure switch (except the AW10) Panel mount
	AW20	1/8, 1/4	
	AW30	1/4, 3/8	
	AW40	1/4, 3/8, 1/2	
	AW40-06	3/4	
	AW60	3/4, 1	
Filter Regulator with Backflow Function Series AW□K **Pages 366 through to 377**	**AW20K**	1/8, 1/4	
	AW30K	1/4, 3/8	
	AW40K	1/4, 3/8, 1/2	
	AW40K-06	3/4	
	AW60K	3/4, 1	
Mist Separator Regulator Series AWM **Pages 378 through to 387**	**AWM20**	1/8, 1/4	
	AWM30	1/4, 3/8	
	AWM40	1/4, 3/8, 1/2	
Micro Mist Separator Regulator Series AWD **Pages 378 through to 387**	**AWD20**	1/8, 1/4	
	AWD30	1/4, 3/8	
	AWD40	1/4, 3/8, 1/2	

Filter Regulator

AW10 to AW60

Filter Regulator with Backflow Function

AW20K to AW60K

JIS Symbol
Filter Regulator

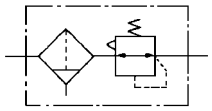

Filter Regulator with Backflow Function

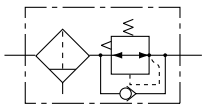

- **Integrated filter and regulator units save space and require less piping.**
- **With the backflow function it incorporates a mechanism to exhaust the air pressure in the outlet side reliably and quickly.**

Example)
When the air supply is cut off and releasing the inlet pressure to the atmosphere, the residual pressure release of the outlet side can be ensured for a safety purpose.

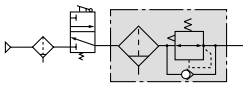

How to Order

AW 30 K – □ 03 BE – □ – □

❶ ❷ ❸ ❹ ❺ ❻

- **Made to Order**
  Refer to pages 374 through to 377 for details.

- Option/Semi-standard: Select one each for **a** to **i**.
- Option/Semi-standard symbol: When more than one specification is required, indicate in alphanumeric order.

Example) AW30K-03BE-1N

		Symbol	Description	❶ Body size 10	20	30	40	60
❷	With backflow function	Nil	Without backflow function	●	●	●	●	●
		K Note 1)	With backflow function	—	●	●	●	●
		+						
❸	Thread type	Nil	Metric thread (M5)	●	—	—	—	—
			Rc	—	●	●	●	●
		N Note 2)	NPT	—	●	●	●	●
		F Note 3)	G	—	●	●	●	●
		+						
❹	Port size	M5	M5	●	—	—	—	—
		01	1/8	—	●	—	—	—
		02	1/4	—	●	●	●	—
		03	3/8	—	—	●	●	—
		04	1/2	—	—	—	●	—
		06	3/4	—	—	—	●	●
		10	1	—	—	—	—	●
		+						
❺ Option Note 4)	a Mounting	Nil	Without mounting option	●	●	●	●	●
		B Note 5)	With bracket	●	●	●	●	●
		H	With set nut (for panel fitting)	●	●	●	●	—
		+						
	b Float type auto drain	Nil	Without auto drain	●	●	●	●	●
		C	Float type auto drain (N.C.)	●	●	●	●	●
		D	Float type auto drain (N.O.)	—	—	●	●	●
		+						
	c Pressure gauge	Nil	Without pressure gauge	●	●	●	●	●
		E	Square embedded type pressure gauge (with limit indicator)	—	●	●	●	●
		G	Round type pressure gauge (without limit indicator)	●	—	—	—	—
			Round type pressure gauge (with limit indicator)	—	●	●	●	●
		M	Round type pressure gauge (with color zone)	—	●	●	●	●
	c Digital pressure switch	E1 Note 6)	Output: NPN output / Electrical entry: Wiring bottom entry	—	●	●	●	●
		E2 Note 6)	Output: NPN output / Electrical entry: Wiring top entry	—	●	●	●	●
		E3 Note 6)	Output: PNP output / Electrical entry: Wiring bottom entry	—	●	●	●	●
		E4 Note 6)	Output: PNP output / Electrical entry: Wiring top entry	—	●	●	●	●
		+						
❻ Semi-standard	d Set pressure	Nil Note 7)	0.05 to 0.85 MPa setting	●	●	●	●	●
		1 Note 8)	0.02 to 0.2 MPa setting	●	●	●	●	●
		+						
	e Bowl Note 9)	Nil	Polycarbonate bowl	●	●	●	●	●
		2	Metal bowl	●	●	●	●	●
		6	Nylon bowl	●	●	●	●	●
		8	Metal bowl with level gauge	—	—	●	●	●
		C	With bowl guard	—	●	—	—	—
		6C	Nylon bowl with bowl guard	—	●	—	—	—

AW20, AW20K AW40, AW40K

		Symbol	Description	❶ Body size 10	20	30	40	60
❻ Semi-standard	f Drain port Note 10)	Nil	With drain cock	●	●	●	●	●
		J Note 11)	Drain guide 1/8	—	●	—	—	—
			Drain guide 1/4	—	—	●	●	●
		W Note 12)	Drain cock with barb fitting: For ø6 x ø4 nylon tube	—	—	●	●	●
		+						
	g Exhaust mechanism	Nil	Relieving type	●	●	●	●	●
		N	Non-relieving type	●	●	●	●	●
		+						
	h Flow direction	Nil	Flow direction: Left to right	●	●	●	●	●
		R	Flow direction: Right to left	●	●	●	●	●
		+						
	i Pressure unit	Nil	Name plate, caution plate for bowl, and pressure gauge in imperial units: MPa	●	●	●	●	●
		Z Note 13)	Name plate, caution plate for bowl, and pressure gauge in imperial units: psi, °F	○ Note 15)	○ Note 15)	○ Note 15)	○ Note 15)	○ Note 15)
		ZA Note 14)	Digital pressure switch: With unit conversion function	—	△ Note 16)	△ Note 16)	△ Note 16)	△ Note 16)

Note 1) The AW10 type comes with a backflow function as a standard feature. (K is not available.) When using the AW10 type as w/ backflow function, backflow may not occur with the set pressure 0.15 MPa or less. Please set the inlet pressure to at least 0.05 MPa higher than the set pressure.
Note 2) Drain guide is NPT 1/8 (applicable to the AW20(K)) and NPT 1/4 (applicable to the AW30(K) to AW60(K)). The auto drain port comes with ø3/8" one-touch fitting (applicable to the AW30(K) to AW60(K)).
Note 3) Drain guide is G 1/8 (applicable to the AW20(K)) and G 1/4 (applicable to the AW30(K) to AW60(K)).
Note 4) Option B, G, H, M are not assembled and supplied loose at the time of shipment.
Note 5) Assembly of a bracket and set nuts (AW10, AW20(K) to AW40(K))
Including 2 mounting screws for the AW60(K)
Note 6) When choosing with H (panel mount), the installation space for lead wires will not be secured. In this case, select "wiring top entry" for the electrical entry.
Note 7) Only the AW10 has a pressure setting of 0.05 to 0.7 MPa.
Note 8) The only difference from the standard specifications is the adjusting spring for the regulator. It does not restrict the setting of 0.2 MPa or more. When the pressure gauge is attached, a 0.2 MPa pressure gauge will be fitted.
Note 9) Refer to Chemical Data on page 287 when selecting a case material.
Note 10) Float type auto drain: The combination of C and D is not possible.
Note 11) Without a valve function
Note 12) Metal bowl: The combination of 2 and 8 is not possible.
Note 13) For thread type: M5 and NPT. This product is for overseas use only according to the new Measurement Law. (The SI unit type is provided for use in Japan.) The digital pressure switch will be equipped with the unit conversion function, setting to psi initially.
Note 14) For options: E1, E2, E3, E4. This product is for overseas use only according to the new Measurement Law. (The SI unit is provided for use in Japan.)
Note 15) ○: For thread type: M5 and NPT only
Note 16) △: Select with options: E1, E2, E3, E4.

Standard Specifications

Model	AW10	AW20(K)	AW30(K)	AW40(K)	AW40(K)-06	AW60(K)
Port size	M5 x 0.8	1/8, 1/4	1/4, 3/8	1/4, 3/8, 1/2	3/4	3/4, 1
Pressure gauge port size Note 1)	1/16 Note 2)	1/8		1/4		
Fluid	Air					
Ambient and fluid temperature Note 3)	–5 to 60°C (with no freezing)					
Proof pressure	1.5 MPa					
Maximum operating pressure	1.0 MPa					
Set pressure range	0.05 to 0.7 MPa	0.05 to 0.85 MPa				
Relief pressure Note 4)	Set pressure + 0.05 MPa [at relief flow rate of 0.1 ℓ/min (ANR)]					
Nominal filtration rating	5 µm					
Drain capacity (cm³)	2.5	8	25	45	45	45
Bowl material	Polycarbonate					
Bowl guard	—	Semi-standard	Standard			
Construction	Relieving type					
Mass (kg)	0.09	0.32	0.40	0.72	0.75	2.00

Note 1) Pressure gauge connection threads are not available for F.R.L. unit with a square embedded type pressure gauge (AW20(K) to AW60(K)).
Note 2) Use a bushing (part no:131368) when connecting the R1/8 pressure gauge to the Rc 1/16.
Note 3) –5 to 50°C for the products with the digital pressure switch
Note 4) Not applicable to the AW10.

Options/Part No.

Optional specifications			Model					
			AW10(K)	AW20(K)	AW30(K)	AW40(K)	AW40(K)-06	AW60(K)
Bracket assembly Note 1)			AR10P-270AS	AW20P-270AS	AR30P-270AS	AR40P-270AS		AW60P-270AS Note 6)
Set nut			AR10P-260S	AR20P-260S	AR30P-260S	AR40P-260S		— Note 7)
Pressure gauge	Round type Note 2)	Standard	G27-10-R1	G36-10-□01		G46-10-□02		
		0.02 to 0.2 MPa setting	G27-10-R1 Note 3)	G36-2-□01		G46-2-□02		
	Round type Note 2) (with color zone)	Standard	—	G36-10-□01-L		G46-10-□02-L		
		0.02 to 0.2 MPa setting	—	G36-2-□01-L		G46-2-□02-L		
	Square embedded type Note 4)	Standard	—	GC3-10AS [GC3P-010AS (Pressure gauge cover only)]				
		0.02 to 0.2 MPa setting	—	GC3-2AS [GC3P-010AS (Pressure gauge cover only)]				
Digital pressure Note 5) switch		NPN output / Wiring bottom entry	—	ISE35-N-25-MLA [ISE35-N-25-M (Switch body only)]				
		NPN output / Wiring top entry		ISE35-R-25-MLA [ISE35-R-25-M (Switch body only)]				
		PNP output / Wiring bottom entry		ISE35-N-65-MLA [ISE35-N-65-M (Switch body only)]				
		PNP output / Wiring top entry		ISE35-R-65-MLA [ISE35-R-65-M (Switch body only)]				
Float type auto drain Note 8) Note 9)		N.C.	AD17	AD27	AD37	AD47		
		N.O.	—	—	AD38	AD48		

Semi-standard/Bowl Assembly Part No.

Semi-standard specifications						Model					
Bowl material	Float type auto drain Note 8) Note 9)		With drain guide Note 9)	With barb fitting	With bowl guard	AW10(K)	AW20(K)	AW30(K)	AW40(K)	AW40(K)-06	AW60(K)
	N.C.	N.O.									
Polycarbonate	—	—	—	—	●	—	C2SF-C	—	—		
	●	—	—	—	●	—	AD27-C	—	—		
	—	—	●	—	—	—	C2SF-J	C3SF-J	C4SF-J		
	—	—	—	●	—	—	—	C3SF-W	C4SF-W		
	—	—	●	—	●	—	C2SF-CJ	—	—		
Nylon	—	—	—	—	—	C1SF-6	C2SF-6	C3SF-6	C4SF-6		
	—	—	—	—	●	—	C2SF-6C	—	—		
	●	—	—	—	—	AD17-6	AD27-6	AD37-6	AD47-6		
	—	●	—	—	—	—	—	AD38-6	AD48-6		
	●	—	—	—	●	—	AD27-6C	—	—		
	—	—	●	—	—	—	C2SF-6J	C3SF-6J	C4SF-6J		
	—	—	—	●	—	—	—	C3SF-6W	C4SF-6W		
	—	—	●	—	●	—	C2SF-6CJ	—	—		
Metal	—	—	—	—	—	C1SF-2	C2SF-2	C3SF-2	C4SF-2		
	●	—	—	—	—	AD17-2	AD27-2	AD37-2	AD47-2		
	—	●	—	—	—	—	—	AD38-2	AD48-2		
	—	—	●	—	—	—	C2SF-2J	C3SF-2J	C4SF-2J		
Metal bowl with level gauge	—	—	—	—	—	—	—	C3LF-8	C4LF-8		
	●	—	—	—	—	—	—	AD37-8	AD47-8		
	—	●	—	—	—	—	—	AD38-8	AD48-8		
	—	—	●	—	—	—	—	C3LF-8J	C4LF-8J		

Note 1) Assembly of a bracket and set nuts
Note 2) □ in part numbers for a round pressure gauge indicates a type of connection thread. No indication is necessary for R; however, indicate N for NPT. Please contact SMC regarding the connection thread NPT and pressure gauge supply for psi unit specifications.
Note 3) Standard pressure gauge
Note 4) Including one O-ring and 2 mounting screws. [ ]: Pressure gauge cover only
Note 5) Lead wire with connector (2 m), adapter, lock pin, O-ring (1 pc.), mounting screw (2 pcs.) are attached. [ ]: Switch body only. Also, regarding how to order the digital pressure switch, please refer to page 388. A pressure switch adapter assembly (AW60P-310AS) will be additionally required for the AW60(K) only. Use the attached mounting screw (M3 x 0.5 x 14) for mounting. The mounting screw (M3 x 0.5 x 7) attached to the digital pressure switch assembly will not be required.
Note 6) Assembly of a bracket and 2 mounting screws
Note 7) Please consult SMC regarding the set nuts for the AW60(K).
Note 8) Minimum operating pressure: N.O. type–0.1 MPa; N.C. type–0.1 MPa (AD27) and 0.15 MPa (AD37/47). Please contact SMC for psi and °F unit specifications.
Note 9) Please consult SMC for details on drain piping to fit NPT or G port sizes.
Note) • Bowl O-ring is included for the AW20(K) to AW60(K).
• Bowl assembly for the AW30(K) to AW60(K) models comes with a bowl guard (steel band material). (except when the bowl material is metal)

Series AW10 to AW60
Series AW20K to AW60K
Specific Product Precautions

Be sure to read before handling. Refer to front matters 42 and 43 for Safety Instructions and pages 287 to 291 for F.R.L. Precautions.

Selection

⚠ Warning

1. Residual pressure disposal (outlet pressure removal) is not possible for the AW20 to AW60 even though the inlet pressure is exhausted. When the residual pressure disposal is performed, use the filter regulator with backflow function (AW20K to AW60K).

Maintenance

⚠ Warning

1. Replace the element every 2 years or when the pressure drop becomes 0.1 MPa, whichever comes first, to prevent damage to the element.

Mounting and Adjustment

⚠ Warning

1. Set the regulator while verifying the displayed values of the inlet and outlet pressure gauges. Turning the regulator knob excessively can cause damage to the internal parts.
2. The pressure gauge included with regulators for 0.02 to 0.2 MPa setting is for up to 0.2 MPa use only (except the AW10). Exceeding 0.2 MPa of pressure can damage the gauge.
3. Do not use tools on the pressure regulator knob as this may cause damage. It must be operated manually.

⚠ Caution

1. Be sure to unlock the knob before adjusting the pressure and lock it after setting the pressure. Failure to follow this procedure can cause damage to the knob and the outlet pressure may fluctuate.
   - Pull the pressure regulator knob to unlock. (You can visually verify this with the “orange mark” that appears in the gap.)
   - Push the pressure regulator knob to lock. When the knob is not easily locked, turn it left and right a little and then push it (when the knob is locked, the “orange mark”, i.e., the gap will disappear).

2. A knob cover is available to prevent careless operation of the knob. Refer to page 389 for details.

Flow Characteristics (Representative values)

Condition: Inlet pressure 0.7 MPa

AW10

M5

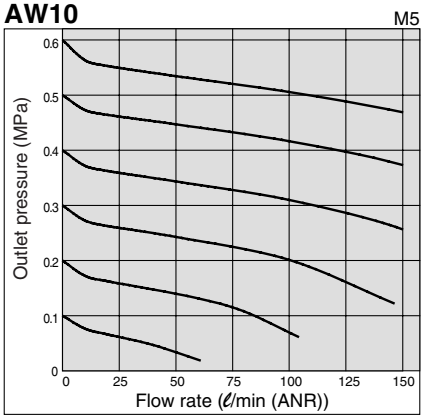

AW30(K)

Rc 3/8

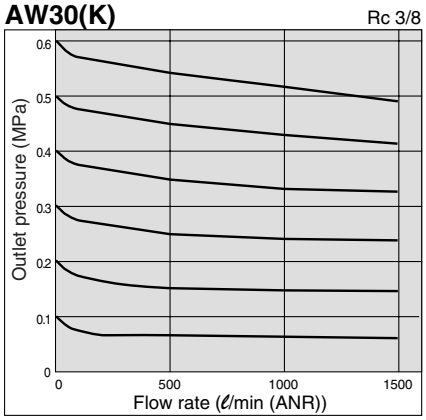

AW40(K)-06

Rc 3/4

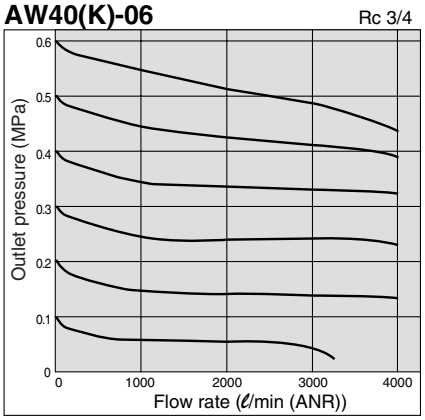

AW20(K)

Rc 1/4

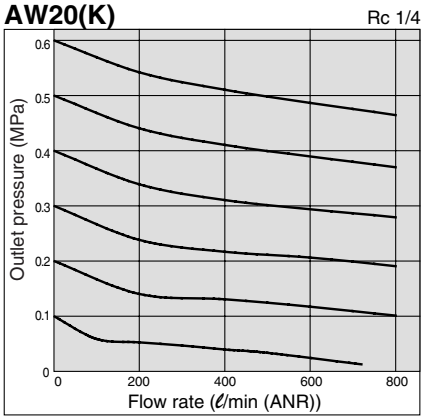

AW40(K)

Rc 1/2

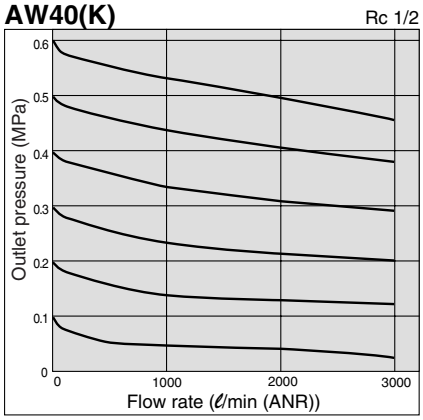

AW60(K)

Rc 1

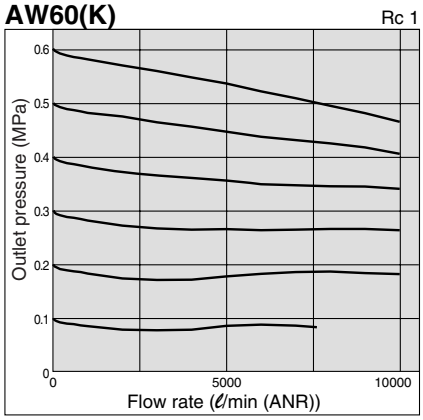

Pressure Characteristics (Representative values)

Conditions: Inlet pressure 0.7 MPa, Outlet pressure 0.2 MPa, Flow rate 20 ℓ/min (ANR)

AW10

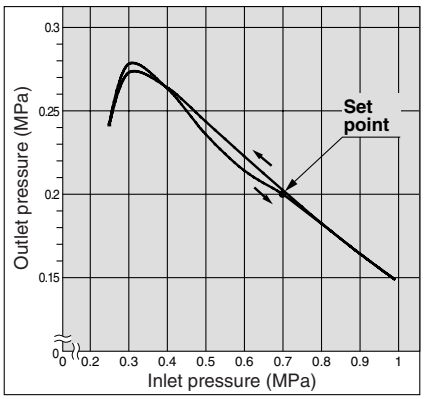

AW30(K)

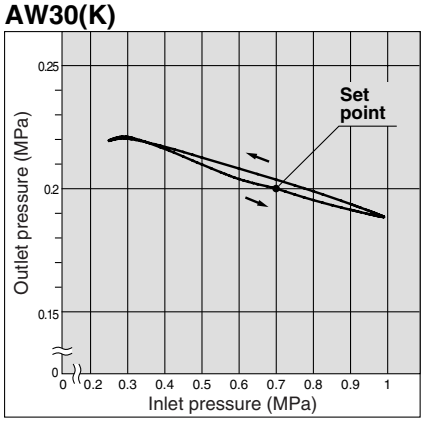

AW40(K)-06

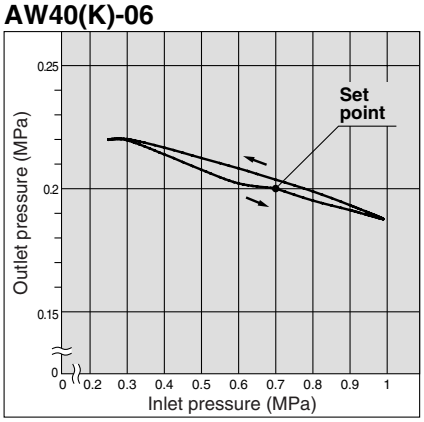

AW20(K)

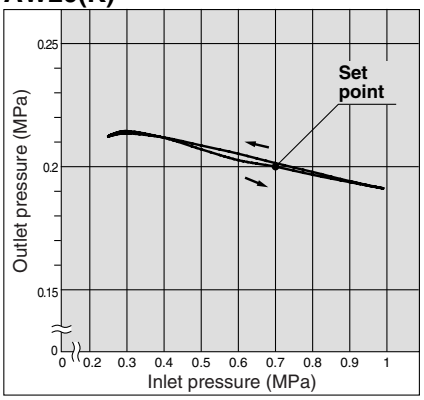

AW40(K)

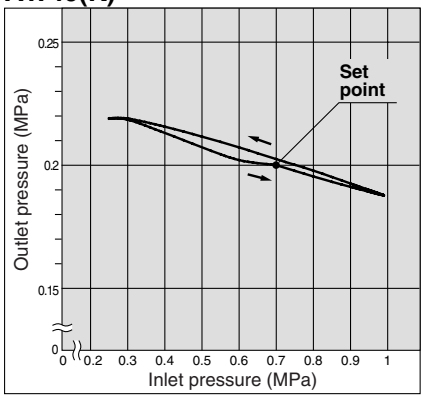

AW60(K)

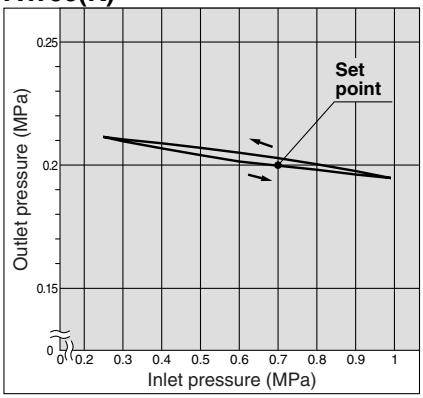

Construction

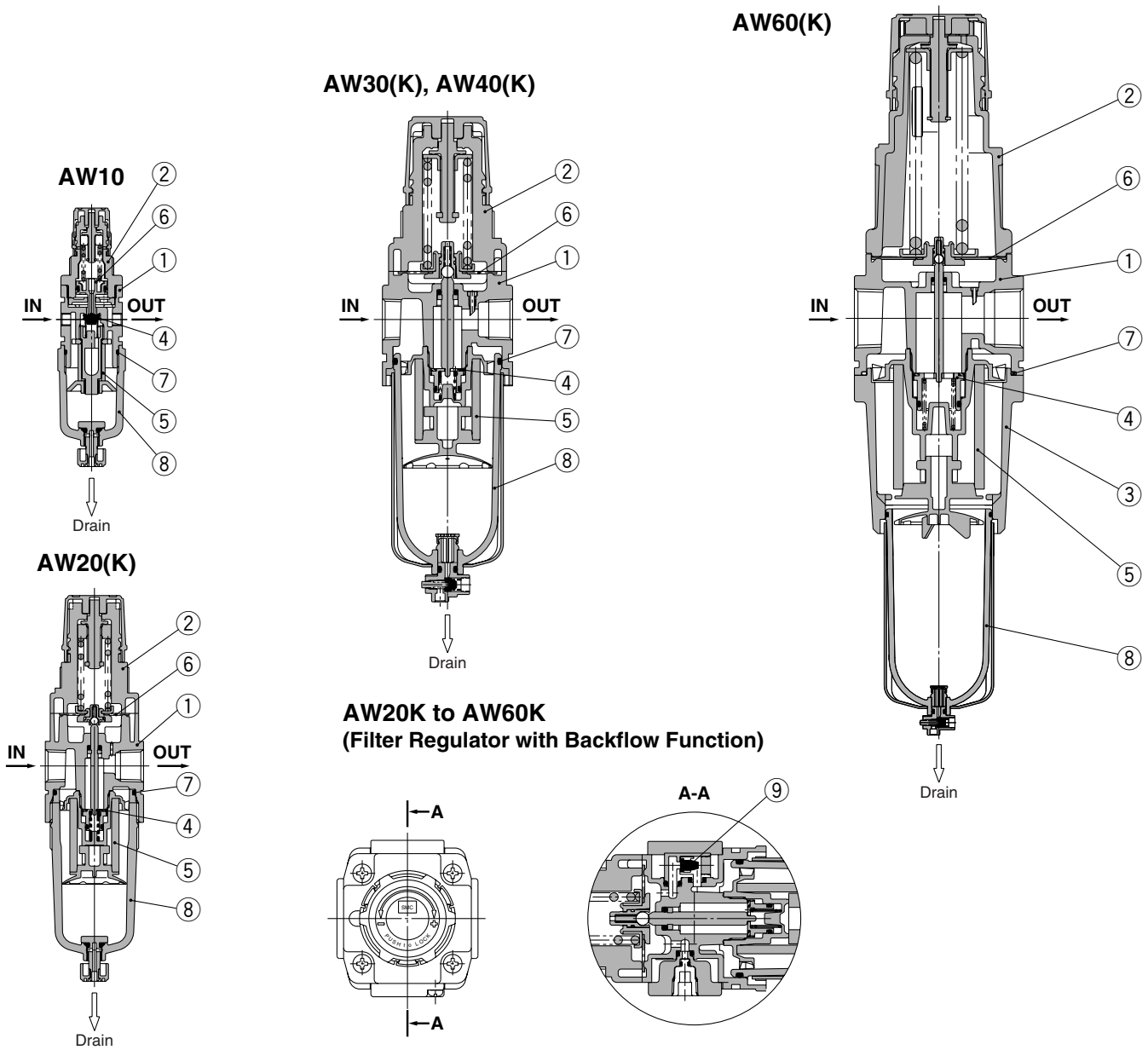

Component Parts

No.	Description	Material	Model	Color
1	**Body**	Zinc die-cast	AW10, AW20	Platinum silver
		Aluminum die-cast	AW30 to AW60	
2	**Bonnet**	Polyacetal	AW10 to AW40	Black
		Aluminum die-cast	AW60	
3	**Housing**	Aluminum die-cast	AW60	Platinum silver

Replacement Parts

No.	Description	Material	Part no.					
			AW10	**AW20(K)**	**AW30(K)**	**AW40(K)**	**AR40(K)-06**	**AW60(K)**
4	**Valve assembly**	Brass, HNBR	AR10P-090S	AW20P-340AS	AW30P-340AS	AW40P-340AS		AW60P-090AS
5	**Filter element**	Non-woven fabric	AF10P-060S	AF20P-060S	AF30P-060S	AF40P-060S		AW60P-060S
6	**Diaphragm assembly**	Weatherable NBR	AR10P-150AS Note 1)	AR20P-150AS	AR30P-150AS	AR40P-150AS		AR50P-150AS
7	**Bowl O-ring**	NBR	C1SFP-260S	C2SFP-260S	C3SFP-260S	C4SFP-260S		
8	**Bowl assembly** Note 2)	Polycarbonate	C1SF	C2SF	C3SF Note 3)	C4SF Note 3)		
9	**Check valve assembly** Note 4)	—	—	AR20KP-020AS				

Note 1) The AW10 is a piston type. Assembly of a piston and a seal (KSYP-13).
Note 2) Bowl O-ring is included for the AW20(K) to AW60(K). Please contact SMC regarding the bowl assembly supply for psi and °F unit specifications.
Note 3) Bowl assembly for the AW30(K) to AW60(K) models comes with a bowl guard (steel band material).
Note 4) Check valve assembly is applicable for a filter regulator with backflow function (AW20K to AW60K) only.
Assembly of a check valve cover, check valve body assembly and 2 screws

Working Principle (Filter Regulator with Backflow Function)

AW10

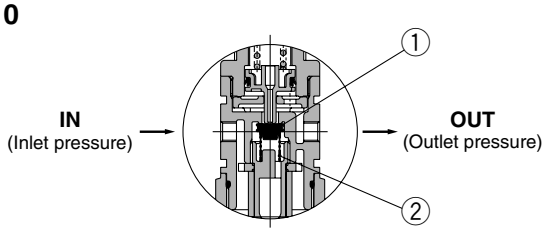

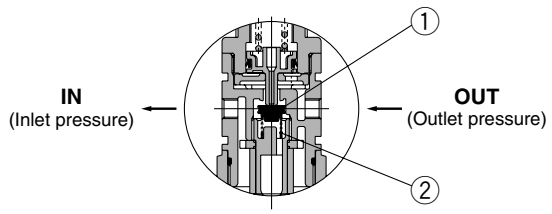

When the inlet pressure is higher than the regulating pressure, the check valve operates as a normal regulator (Figure 1).
When the inlet pressure is shut off and exhausted, any inlet pressure applied to the valve ① will be lost. The force for seating the valve ① is the valve spring force ② only. When the valve ① is opened using the outlet force, the outlet pressure will be exhausted at the inlet side. (Figure 2)
When the set pressure is 0.15 MPa or less, valve ① may not open due to the valve spring ② force.

AW20K to AW60K

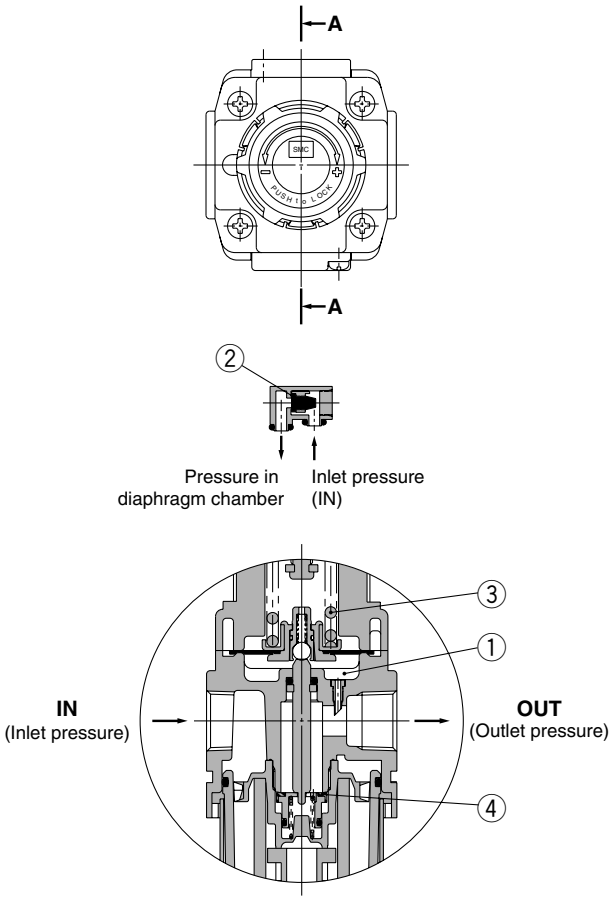

Figure 1 Normal

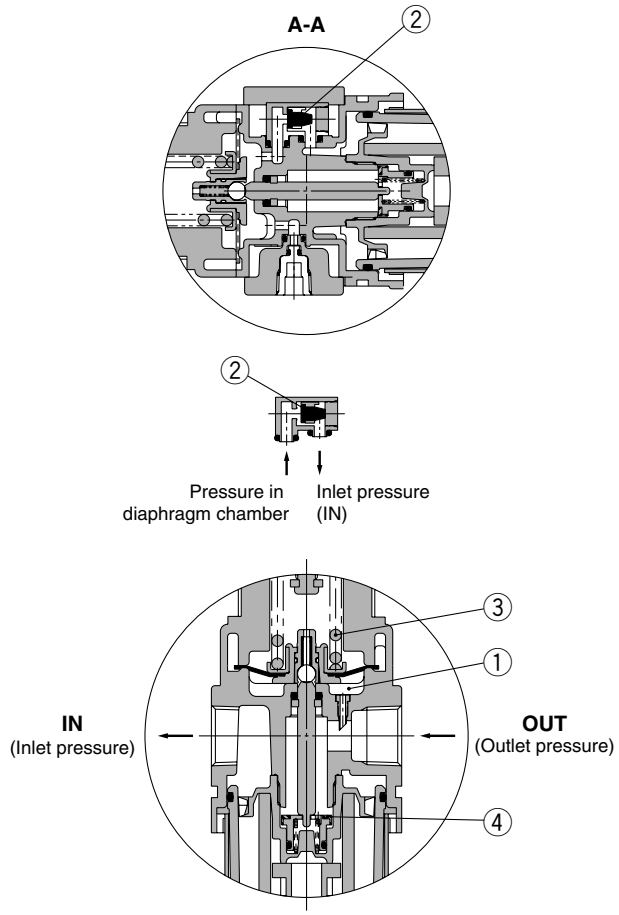

Figure 2 Backflow

When the inlet pressure is higher than the regulating pressure, the check valve ② closes and operates as a normal regulator (Figure 1).
When the inlet pressure is shut off and released, the check valve ② opens and the pressure in the diaphragm chamber ① is released into the inlet side (Figure 2).
This lowers the pressure in the diaphragm chamber ① and the force generated by the pressure regulator spring ③ lifts the diaphragm. Valve ④ opens through the stem, and the outlet pressure is released to the inlet side (Figure 2).

Dimensions

AW10, AW20(K)

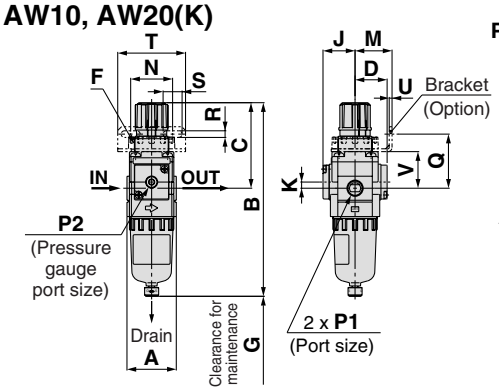

Panel fitting dimension

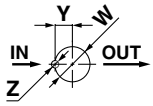

Plate thickness
AW10, AW20(K): Max. 3.5

AW30(K) to AW40(K)-06

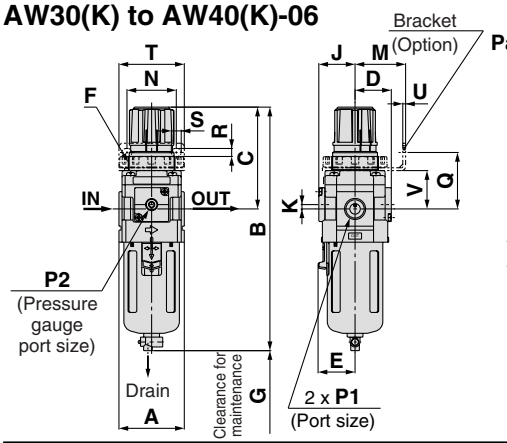

Panel fitting dimension

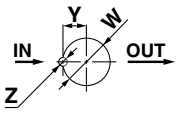

Plate thickness
AW30(K): Max. 3.5
AW40(K): Max. 5

AW60(K)

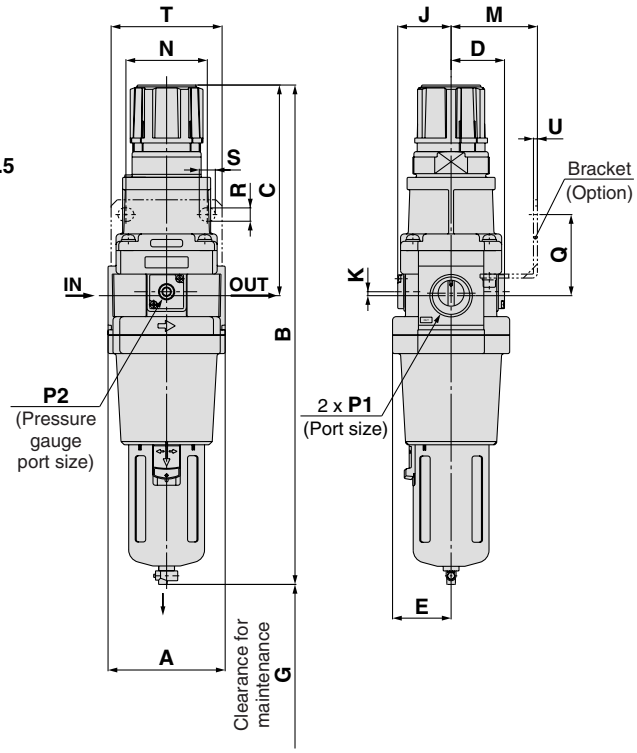

Applicable model	AW20(K) to AW60(K)		AW10, AW20(K) to AW60(K)	AW20(K) to AW60(K)
Option	Square embedded type pressure gauge	Digital pressure switch	Round type pressure gauge	Round type pressure gauge (with color zone)
Dimensions	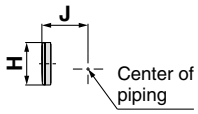	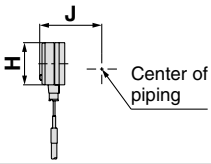	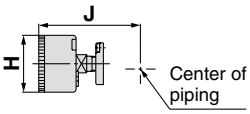	

Applicable model	AW10, AW20(K)		AW20(K)	AW30(K) to AW60(K)				
Optional/Semi-standard specifications	With auto drain (N.C.)	Metal bowl	With drain guide	With auto drain (N.O./N.C.)	Metal bowl	Metal bowl with level gauge	With drain guide	Drain cock with barb fitting
Dimensions	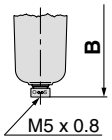	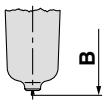	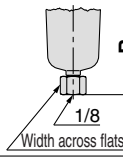	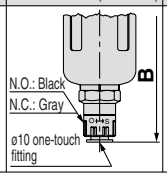	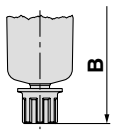	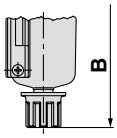	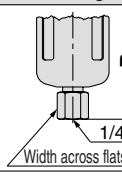	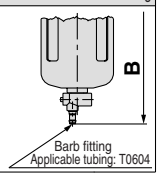

Model	Standard specifications											Optional specifications							
												Square type pressure gauge		Digital pressure switch		Round type pressure gauge		Round type pressure gauge (with color zone)	
	P1	P2	A	B Note)	C	D	E	F	G	J	K	H	J	H	J	H	J	H	J
AW10	M5 x 0.8	1/16	25	108	48	12.5	—	M18 x 1	25	13	0	—	—	—	—	ø26	26	—	—
AW20(K)	1/8, 1/4	1/8	40	160	73	26	—	M28 x 1	40	26	5	□28	27	□27.8	37.5	ø37.5	63	ø37.5	63
AW30(K)	1/4, 3/8	1/8	53	201	86	29.5	30	M38 x 1.5	55	29.5	3.5	□28	30.5	□27.8	41	ø37.5	66	ø37.5	66
AW40(K)	1/4, 3/8, 1/2	1/4	70	239	92	37.5	38	M42 x 1.5	80	37.5	1.5	□28	38.5	□27.8	49	ø42.5	76	ø42.5	76
AW40(K)-06	3/4	1/4	75	242	93	37.5	38	M42 x 1.5	80	37.5	1.2	□28	38.5	□27.8	49	ø42.5	76	ø42.5	76
AW60(K)	3/4, 1	1/4	95	409	175	43.5	47.5	—	20	43.5	3.2	□28	44.5	□27.8	61.5	ø42.5	84	ø42.5	84

Model	Optional specifications												Semi-standard specifications			
	Bracket mount							Panel mount				With auto drain	With barb fitting	With drain guide	Metal bowl	Metal bowl with level gauge
	M	N	Q	R	S	T	U	V	W	Y	Z	B Note)	B Note)	B Note)	B Note)	B Note)
AW10	25	28	30	4.5	6.5	40	2	18	18.5	—	—	125	—	—	107	—
AW20(K)	30	34	44	5.4	15.4	55	2.3	30	28.5	14	6	177	—	164	160	—
AW30(K)	41	40	46	6.5	8	53	2.3	31	38.5	19	7	242	209	208	214	234
AW40(K)	50	54	54	8.5	10.5	70	2.3	35.5	42.5	21	7	278	247	246	252	272
AW40(K)-06	50	54	56	8.5	10.5	70	2.3	37	42.5	21	7	282	251	249	255	275
AW60(K)	70	66	66	11	13	90	3.2	—	—	—	—	448	417	416	422	442

Note) The total length of B dimension is the length when the filter regulator knob is unlocked.

Filter Regulator
AW20 to AW60
Made to Order Specifications:

Made to Order

Please contact SMC for detailed dimensions, specifications, and lead times.

① Special Temperature Environment

Special materials are used in the manufacturing of seals and resin parts to allow them to withstand various temperature conditions in cold or tropical (hot) climates.

Specifications

Made-to-order part no.		-X430	-X440
Environment		Low temperature	High temperature
Ambient temperature (°C)		–30 to 60	–5 to 80
Fluid temperature (°C)		–5 to 60 (with no freezing)	
Material	**Rubber parts**	Special NBR	FKM
	Main parts	Metal (Aluminum die-cast), etc.	

Applicable Model

Model	AW30	AW40	AW40-06	AW60
Port size	1/4, 3/8	1/4, 3/8, 1/2	3/4	3/4, 1

AW 30 – ☐ 03 BG – 2 ☐ – X430

❶ ❷ ❸ ❹ ❺ ❻

For high/low temperature

X430	Low temperature
X440	High temperature

- Option/Semi-standard: Select one each for **a** to **g**.
- Option/Semi-standard symbol: When more than one specification is required, indicate in alphanumeric order.

Example) AW30-03BG-2N-X430

			Symbol	Description	❶ Body size 30	40	60
❷	Thread type		**Nil**	Rc	●	●	●
			N	NPT	●	●	●
			F	G	●	●	●
			+				
❸	Port size		**02**	1/4	●	●	—
			03	3/8	●	●	—
			04	1/2	—	●	—
			06	3/4	—	●	●
			10	1	—	—	●
			+				
❹	Option Note 1)	a Mounting	**Nil**	Without mounting option	●	●	●
			B Note 2)	With bracket	●	●	●
			H	With set nut (for panel fitting)	●	●	—
			+				
		b Pressure gauge	**Nil**	Without pressure gauge	●	●	●
			G Note 3)	Round type pressure gauge (without limit indicator)	●	●	●
			+				
❺	Bowl Note 4)		**2**	Metal bowl	●	●	●
			+				
❻	Semi-standard	c Set pressure	**Nil**	0.05 to 0.85 MPa setting	●	●	●
			1 Note 5)	0.02 to 0.2 MPa setting	●	●	●
			+				
		d Drain port	**Nil**	With drain cock	●	●	●
			J Note 6)	Drain guide 1/4	●	●	●
			+				
		e Exhaust mechanism	**Nil**	Relieving type	●	●	●
			N	Non-relieving type	●	●	●
			+				
		f Flow direction	**Nil**	Flow direction: Left to right	●	●	●
			R	Flow direction: Right to left	●	●	●
			+				
		g Pressure unit	**Nil**	Name plate, caution plate for bowl, and pressure gauge in imperial units: MPa	●	●	●
			Z Note 7)	Name plate, caution plate for bowl, and pressure gauge in imperial units: psi, °F	○ Note 8)	○ Note 8)	○ Note 8)

Note 1) Option B, G, H are not assembled and supplied loose at the time of shipment.
Note 2) Assembly of a bracket and set nuts (AW30 to AW40)
Including 2 mounting screws for the AW60
Note 3) Mounting thread for pressure gauge: 1/8 for the AW30, 1/4 for the AW40 and AW60. Pressure gauge type: G43
Note 4) Only metal bowl 2 is available.
Note 5) The only difference from the standard specifications is the adjusting spring for the regulator. It does not restrict the setting of 0.2 MPa or more. When the pressure gauge is attached, a 0.2 MPa pressure gauge will be fitted.
Note 6) Without a valve function
Note 7) For thread type: NPT. This product is for overseas use only according to the new Measurement Law. (The SI unit type is provided for use in Japan.)
Note 8) ○: For thread type: NPT only

② High Pressure

Strong materials are used in the manufacturing of air filters intended for high pressure operation. Also, construction modification allows a wider regulating pressure range.

Specifications

Made-to-order part no.	-X425
Proof pressure (MPa)	3.0
Maximum operating pressure (MPa)	2.0
Set pressure range (MPa)	0.1 to 1.6
Ambient and fluid temperature (°C)	–5 to 60°C (with no freezing)

AW30-03-2-X425

Applicable Model

Model	AW20	AW30	AW40	AW40-06	AW60
Port size	1/8, 1/4	1/4, 3/8	1/4, 3/8, 1/2	3/4	3/4, 1

AW 30 – ☐ 03 BG – 2 ☐ – X425

❶ ❷ ❸ ❹ ❺ ❻

For high pressure

- Option/Semi-standard: Select one each for **a** to **f**.
- Option/Semi-standard symbol: When more than one specification is required, indicate in alphanumeric order.

Example) AW30-03BG-2N-X425

			Symbol	Description	❶ Body size 20	30	40	60
❷	Thread type		Nil	Rc	●	●	●	●
			N	NPT	●	●	●	●
			F	G	●	●	●	●
			+					
❸	Port size		01	1/8	●	—	—	—
			02	1/4	●	●	●	—
			03	3/8	—	●	●	—
			04	1/2	—	—	●	—
			06	3/4	—	—	●	●
			10	1	—	—	—	●
			+					
❹	Option Note 1)	a Mounting	Nil	Without mounting option	●	●	●	●
			B Note 2)	With bracket	●	●	●	●
			H	With set nut (for panel fitting)	●	●	●	—
			+					
		b Pressure gauge	Nil	Without pressure gauge	●	●	●	●
			G Note 3)	Round type pressure gauge (with limit indicator)	●	●	●	●
			+					
❺	Bowl Note 4)		2	Metal bowl	●	●	●	●
			8	Metal bowl with level gauge	—	●	●	●
			+					
❻	Semi-standard	c Exhaust mechanism	Nil	Relieving type	●	●	●	●
			N	Non-relieving type	●	●	●	●
			+					
		d Drain port	Nil	With drain cock	●	●	●	●
			J Note 5)	Drain guide 1/8	●	—	—	—
				Drain guide 1/4	—	●	●	●
			+					
		e Flow direction	Nil	Flow direction: Left to right	●	●	●	●
			R	Flow direction: Right to left	●	●	●	●
			+					
		f Pressure unit	Nil	Name plate, caution plate for bowl, and pressure gauge in imperial units: MPa	●	●	●	●
			Z Note 6)	Name plate, caution plate for bowl, and pressure gauge in imperial units: psi, °F	○ Note 7)	○ Note 7)	○ Note 7)	○ Note 7)

Note 1) Option B, G, H are not assembled and supplied loose at the time of shipment.
Note 2) Assembly of a bracket and set nuts (AW20 to AW40)
Including 2 mounting screws for the AW60
Note 3) Mounting thread for pressure gauge: 1/8 for the AW20 and AW30, 1/4 for the AW40 and AW60. Pressure gauge type: G46-20-☐
Note 4) Only metal bowl 2 and 8 are available.
Note 5) Without a valve function
Note 6) For thread type: NPT. This product is for overseas use only according to the new Measurement Law. (The SI unit type is provided for use in Japan.)
Note 7) ○: For thread type: NPT only

Filter Regulator *AW10 to AW60*
Filter Regulator with Backflow Function *AW20K to AW60K*
Made to Order Specifications:

Made to Order

Please contact SMC for detailed dimensions, specifications, and lead times.

③ 0.4 MPa Setting

The maximum set pressure is 0.4 MPa. When a pressure gauge is included, the display will show a range from 0 to 0.4 MPa.

Specifications

Proof pressure	1.5 MPa
Maximum operating pressure	1.0 MPa
Set pressure range	0.05 to 0.4 MPa

Applicable Model

Model	AW10	AW20(K)	AW30(K)	AW40(K)	AW40(K)-06	AW60(K)
Port size	M5	1/8, 1/4	1/4, 3/8	1/4, 3/8, 1/2	3/4	3/4, 1

④ Long Bowl

Drain capacity is greater than that of standard models.

Applicable Model/Drain Capacity

Model	AW10	AW20(K)	AW30(K)	AW40(K)	AW40(K)-06	AW60(K)
Port size	M5	1/8, 1/4	1/4, 3/8	1/4, 3/8, 1/2	3/4	3/4, 1
Drain capacity (cm^3)	9	19	43	88		

Note) Please consult SMC for dimensions.

How to Order

AW 30 ❶ ❷ – ❸ 03 ❹ ❺ – ❻ – X406

X406	0.4 MPa setting
X64	Long bowl

- Option/Semi-standard: Select one each for **a** to **h**.
- Option/Semi-standard symbol: When more than one specification is required, indicate in alphanumeric order.

Example) AW30K-03BE-2N-X406

		Symbol	Description	0.4 MPa Setting ❶ Body size 10	20	30	40	60	Long Bowl ❶ Body size 10	20	30	40	60
❷	With backflow function	**Nil**	Without backflow function	●	●	●	●	●	●	●	●	●	●
		K Note 1)	With backflow function	–	●	●	●	●	–	●	●	●	●
		+											
❸	Thread type	**Nil**	Metric thread (M5)	●	–	–	–	–	●	–	–	–	–
			Rc	–	●	●	●	●	–	●	●	●	●
		N Note 2)	NPT	–	●	●	●	●	–	●	●	●	●
		F Note 3)	G	–	●	●	●	●	–	●	●	●	●
		+											
❹	Port size	**M5**	M5	●	–	–	–	–	●	–	–	–	–
		01	1/8	–	●	–	–	–	–	●	–	–	–
		02	1/4	–	●	●	●	–	–	●	●	●	–
		03	3/8	–	–	●	●	–	–	–	●	●	–
		04	1/2	–	–	–	●	–	–	–	–	●	–
		06	3/4	–	–	–	●	●	–	–	–	●	●
		10	1	–	–	–	–	●	–	–	–	–	●
		+											
❺ Option Note 4)	a Mounting	**Nil**	Without mounting option	●	●	●	●	●	●	●	●	●	●
		B Note 5)	With bracket	●	●	●	●	●	●	●	●	●	●
		H	With set nut (for panel fitting)	●	●	●	●	–	●	●	●	●	–
		+											
	b Float type auto drain	**Nil**	Without auto drain	●	●	●	●	●	–	–	–	–	–
		C	Float type auto drain (N.C.)	●	●	●	●	●	–	–	–	–	–
		D	Float type auto drain (N.O.)	–	–	●	●	●	–	–	–	–	–
		+											
	c Pressure gauge	**Nil**	Without pressure gauge	●	●	●	●	●	●	●	●	●	●
		E	Square embedded type pressure gauge (with limit indicator)	–	●	●	●	●	–	●	●	●	●
		G	Round type pressure gauge (without limit indicator)	●	–	–	–	–	●	–	–	–	–
			Round type pressure gauge (with limit indicator)	–	●	●	●	●	–	●	●	●	●
		M	Round type pressure gauge (with color zone)	–	●	●	●	●	–	●	●	●	●
	c Digital pressure switch	**E1** Note 6)	Output: NPN output / Electrical entry: Wiring bottom entry	–	●	●	●	●	–	●	●	●	●
		E2 Note 6)	Output: NPN output / Electrical entry: Wiring top entry	–	●	●	●	●	–	●	●	●	●
		E3 Note 6)	Output: PNP output / Electrical entry: Wiring bottom entry	–	●	●	●	●	–	●	●	●	●
		E4 Note 6)	Output: PNP output / Electrical entry: Wiring top entry	–	●	●	●	●	–	●	●	●	●

Note 1) The AW10 type comes with a backflow function as a standard feature. (K is not available.) When using the AW10 type as w/ backflow function, backflow may not occur with the set pressure 0.15 MPa or less. Please set the inlet pressure to at least 0.05 MPa higher than the set pressure.

Note 2) Drain guide is NPT 1/8 (applicable to the AW20(K)) and NPT 1/4 (applicable to the AW30(K) to AW60(K)). The auto drain port comes with ø3/8" One-touch fitting (applicable to the AW30(K) to AW60(K)).

Note 3) Drain guide is G 1/8 (applicable to the AW20(K)) and G 1/4 (applicable to the AW30(K) to AW60(K)).

Note 4) Option B, G, H, M are not assembled and supplied loose at the time of shipment.

Note 5) Assembly of a bracket and set nuts. (AW10, AW20(K) to AW40(K)). Including 2 mounting screws for the AW60(K)

Note 6) When choosing with H (panel mount), the installation space for lead wires will not be secured. In this case, select "wiring down entry" for the electrial entry.

			Symbol	Description	0.4 MPa Setting					Long Bowl				
					❶ Body size					❶ Body size				
					10	20	30	40	60	10	20	30	40	60
❻	Semi-standard	d	Set pressure	Nil Note 7)	0.05 to 0.85 MPa setting	—	—	—	—	—	●	●	●	●	●
				1 Note 8)	0.02 to 0.2 MPa setting	—	—	—	—	—	●	●	●	●	●
		+													
		e	Bowl Note 9)	Nil	Polycarbonate bowl	●	●	●	●	●	●	●	●	●	●
				2	Metal bowl	●	●	●	●	●	●	●	●	●	●
				6	Nylon bowl	●	●	●	●	●	●	●	●	●	●
				8	Metal bowl with level gauge	—	—	●	●	●	—	—	—	—	—
				C	With bowl guard	—	●	—	—	—	—	●	—	—	—
				6C	Nylon bowl with bowl guard	—	●	—	—	—	—	●	—	—	—
		+													
		f	Drain port Note 10)	Nil	With drain cock	●	●	●	●	●	●	●	●	●	●
				J Note 11)	Drain guide 1/8	—	●	—	—	—	—	●	—	—	—
					Drain guide 1/4	—	—	●	●	●	—	—	●	●	●
				W Note 12)	Drain cock with barb fitting: For ø6 x ø4 nylon tube	—	—	●	●	●	—	—	●	●	●
		+													
		g	Exhaust mechanism	Nil	Relieving type	●	●	●	●	●	●	●	●	●	●
				N	Non-relieving type	●	●	●	●	●	●	●	●	●	●
		+													
		h	Flow direction	Nil	Flow direction: Left to right	●	●	●	●	●	●	●	●	●	●
				R	Flow direction: Right to left	●	●	●	●	●	●	●	●	●	●
		+													
		i	Pressure unit	Nil	Name plate, caution plate for bowl, and pressure gauge in imperial units: MPa	●	●	●	●	●	●	●	●	●	●
				Z Note 13)	Name plate, caution plate for bowl, and pressure gauge in imperial units: psi, °F	○ Note 15)	○ Note 15)	○ Note 15)	○ Note 15)	○ Note 15)	○ Note 15)	○ Note 15)	○ Note 15)	○ Note 15)	○ Note 15)
				ZA Note 14)	Digital pressure switch: With unit conversion function	—	△ Note 16)	△ Note 16)	△ Note 16)	△ Note 16)	—	△ Note 16)	△ Note 16)	△ Note 16)	△ Note 16)

Note 7) Only the AW10 has a pressure setting of 0.05 to 0.7 MPa.
Note 8) The only difference from the standard specifications is the adjusting spring for the regulator. It does not restrict the setting of 0.2 MPa or more. When the pressure gauge is attached, a 0.2 MPa pressure gauge will be fitted.
Note 9) Refer to Chemical Data on page 287 when selecting a case material.
Note 10) Float type auto drain: The combination of C and D is not possible.
Note 11) Without a valve function
Note 12) Metal bowl: The combination of 2 and 8 is not possible.
Note 13) For thread type: M5 and NPT. This product is for overseas use only according to the new Measurement Law. (The SI unit type is provided for use in Japan.) The digital pressure switch will be equipped with the unit conversion function, setting to psi initially.
Note 14) For options: E1, E2, E3, E4. This product is for overseas use only according to the new Measurement Law. (The SI unit is provided for use in Japan.)
Note 15) ○: For thread type: M5 and NPT only
Note 16) △: Select with options: E1, E2, E3, E4.

Option
Digital Pressure Switch

Refer to Best Pneumatics No. 6 for the Specific Product Precautions.

ISE35 – N – 25 – M L A

❶ ❷ ❸ ❹ ❺

		Symbol	Description
❶	Electrical entry	N	Wiring bottom entry 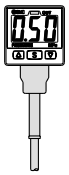
		R	Wiring top entry 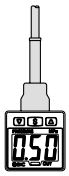
		+	
❷	Output	25	NPN output
		65	PNP output
		+	
❸	Display unit Note 1)	Nil Note 1)	With unit conversion function
		M	Fixed SI unit
		P Note 1)	Pressure unit: psi (initial value) with unit conversion function
		+	
❹	Lead wire	Nil	Without lead wire
		L	Lead wire (2 m) with connector
		+	
❺	Accessories	Nil	Without accessories (switch body only)
		A	With accessories (adapter, O-ring (1 pc.), mounting screw (2 pcs.), lock pin)

Note 1) This product is for overseas use only according to the new Measurement Law. (The SI unit type is provided for use in Japan.) Name plate is included.
Note 2) Instruction manual is attached.
Note 3) When ordering the body only, select the symbol from ❶ to ❸ respectively.

Applicable Series

F.R.L. unit	**AC20, AC25, AC30, AC40, AC50, AC55, AC60**
	AC20A, AC30A, AC40A, AC50A, AC60A
	AC20B, AC25B, AC30B, AC40B, AC50B, AC55B, AC60B
	AC20C, AC25C, AC30C, AC40C
	AC20D, AC30D, AC40D
Regulator	**AR20(K), AR25(K), AR30(K), AR40(K), AR50(K), AR60(K)**
Filter regulator	**AW20(K), AW30(K), AW40(K), AW60(K)**
Mist separator regulator	**AWM20, AWM30, AWM40**
Micro mist separator regulator	**AWD20, AWD30, AWD40**

Diigtal Pressure Switch Details

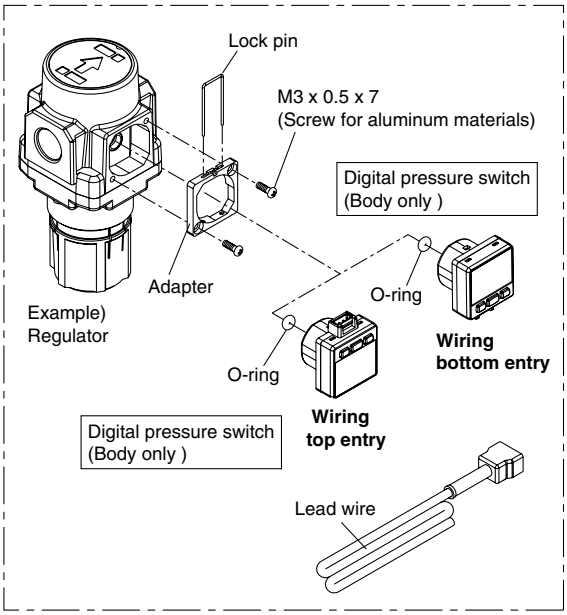

Specifications

Rated pressure range		0 to 1 MPa
Set pressure range		–0.1 to 1 MPa
Withstand pressure		1.5 MPa
Set pressure resolution		0.01 MPa
Power supply voltage		12 to 24 VDC, Ripple (p-p) 10% or less (with power supply polarity protection)
Current consumption		55 mA or less (at no load)
Switch output		NPN or PNP open collector 1 output
	Max. load current	80 mA
	Max. applied voltage	30 V (with NPN output)
	Residual voltage	1 V or less (with load current of 80 mA)
	Response time Anti-chattering function	1 s (Response time selections: 0.25, 0.5, 2, 3)
	Short circuit protection	With short circuit protection
Repeatability		±1%F.S. or less
Hysteresis	**Hysteresis mode**	Variable (can be set from 0)
	Window comparator mode	
Display		3-digit, 7-segment indicator, 2-color display (Red/Green) can be interlocked with the switch output.
Display accuracy		±2%F.S. ±1 digit (at 25°C ± 3°C)
Indication light		Illuminates when output is turned ON. (Green)
Environmental resistance	**Enclosure**	IP40
Lead wire with connector		ø3.4 3-wire 25AWG 2 m

Output

NPN open collector

Max. 30 V, 80 mA
Residual output voltage 1 V or less

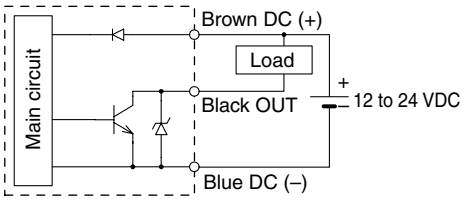

PNP open collector

Max. 80 mA
Residual output voltage 1 V or less

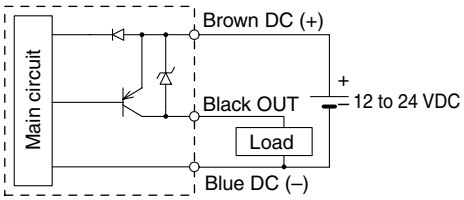

Option
Knob Cover

Prevents careless knob operation.

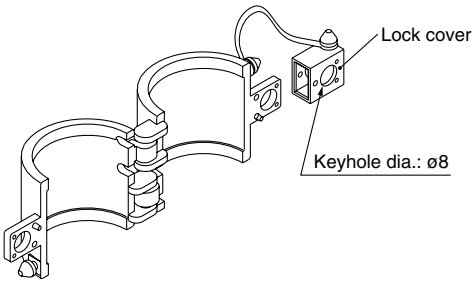

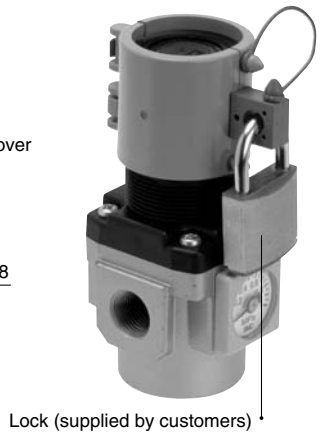

Part no.	Applicable model
AR20P-580AS	AC20□, AR20(K), AW20(K), AWM20, AWD20
AR25P-580AS	AC25□, AR25(K)
AR30P-580AS	AC30□, AR30(K), AW3(K), AWM30, AWD30
AR40P-580AS	AC40□(-06), AR40(K)(-06), AW40(K)(-06), AWM40, AWD40

Issued: Sep 2009

SMC Corporation of America
10100 SMC Boulevard
Noblesville, IN 46060
www.smcusa.com

P.G. Information

Epoxy Coated F.R.L. Units

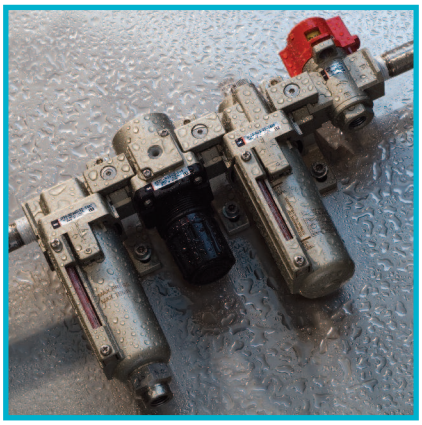

*AC21/31/41-***-*-X2217*
*AF20/30/40-***-*-X480*
*AR20/30/40-***-*-X48*
*AL20/30/40-***-*-X480*
*AW20/30/40-***-*-X48*
*VHS20/30/40-***-*-X513*
Y20/30/40-T4*

Application: Air preparation in an environment that requires enhanced corrosion protection.

Feature 1: Die cast aluminum components are epoxy coated for improved chemical resistance.

Feature 2: Steel external hardware is replaced with stainless steel for improved chemical resistance.

Comparison with Standard Product:

1) Functional performance is equivalent to standard product.
2) Product withstood salt spray testing per ASTM B117-07A with excellent results (See test results on page 12). Improved performance vs. other chemicals is anticipated but has not been verified.

Applications:

- Marine environments
- Water splash zone in various processes
- Washdown in food plants (non-food or splash zone only)

Related Products:

- KQG Series - 316 SUS One-touch Fittings - Coming Soon: KQG2
- KQB2 Series - Ni plated brass One-touch Fittings (Coming Soon)
- ASG Series - 316 SUS One-touch Speed Controls
- CG5 Series - repairable 304 SUS Cylinder
- NCM Series with X6009 option - crimped body 304 SUS Cylinder, domestic interchange
- CJ5 Series - crimped body 304 SUS Cylinder
- HY Series - Aluminum body Hygienic Design Actuators

How To Order

AC 31 B – N 03 D – V – 8 Y Z - X2217

- **AC** – Air Combination Unit
- **31** – Body Size

Symbol	Size
21	1/8
31	3/8
41	1/2

- **B** – Model Combination

Symbol	Model / Assembly Order
Nil	AF + AR + AL
A	AW + AL
B	AF + AR

- **N** – NPT Threads
- **03** – Port Size

Symbol	Port Size	Applicable Body Size
02	1/4	21
03	3/8	31
04	1/2	41

Note: Other sizes, thread forms, options, etc. may be possible, please contact SMC for availability.

- **D** – Accessories

Symbol	Description	Applicable Body Size
Nil	None	All
C	Float Auto Drain (N.C.)	31, 41
D	Float Auto Drain (N.O.)	31, 41

- **V** – Residual Pressure Relief Valve

Symbol	Description	Applicable Model Combo
Nil	Without Valve	All
V	With Downstream Valve	All

- **8** – Bowl

Symbol	Description	Applicable Body Size
2	Metal Bowl	21
8	Metal Bowl With Sight Glass	31, 41

- **Y** – Regulator Handle Orientation

Symbol	Description
Nil	Downward Handle
Y	Upward Handle

- **Z** – Name Plate, Caution Plate On Bowl in psi, °F
- **X2217** – With External Epoxy Coating, Stainless Fasteners

Specifications

Body size	21	31	41
Operating specifications	Same as standard - see catalog ES40-42D or NC160A		
Port size	1/4" NPT	3/8" NPT	1/2" NPT
Auto drain port (AF, AW)	N/A	1/4" NPT	
Bowl type (AF, AL, AW)	Metal	Metal with sight gauge	
Body material	Die cast aluminum		
Bowl material (AF, AL, AW)	Die cast aluminum		
Body, Bowl surface treatment	Epoxy resin coating		
Bonnet (AR, AW)	Polyacetal		
Manual drain (AF, AW)	POM		
External screws	Stainless steel 410		
Individual mounting brackets	Epoxy coated steel		
Panel mount nut (AR, AW)	POM		
Connector brackets (AC)	Die cast zinc (epoxy coated)		
Fill plug (AL)	Stainless steel 304		
Sight dome (AL)	Polycarbonate		
Sight glass hardware (AF, AL, AW)	Stainless steel 304		

Dimensions - Refer to drawings on page 3

mm

AC	A*	AA**	B	C	E	F	G	J	K	M	N	Q	U	V	W
AC21	140	190	160	73	—	45.5	40	26	5	30	51	24	5	33	—
AC31	181	245	220	86	30	58.5	55	29.5	3.5	41	64	35	7	45	34.5
AC41	238	322	239	92	38	75.5	80	37.5	1.5	50	81	40	7	50	41

* Without relief valve option ** With relief valve option

mm

AC-A	A*	AA**	B	C	E	F	G	J	K	M	N	Q	U	V	W
AC21A	90	140	160	73	—	45.5	40	26	5	30	51	24	5	33	—
AC31A	117	181	220	86	30	58.5	55	29.5	3.5	41	64	35	7	45	34.5
AC41A	154	238	239	92	38	75.5	80	37.5	1.5	50	81	40	7	50	41

* Without relief valve option ** With relief valve option

mm

AC-B	A*	AA**	B	C	E	F	G	J	K	M	N	Q	U	V	W
AC21B	90	140	160	73	—	45.5	40	26	5	30	51	24	5	33	—
AC31B	117	181	220	86	30	58.5	55	29.5	3.5	41	64	35	7	45	34.5
AC41B	154	238	239	92	38	75.5	80	37.5	1.5	50	81	40	7	50	41

* Without relief valve option ** With relief valve option

AC

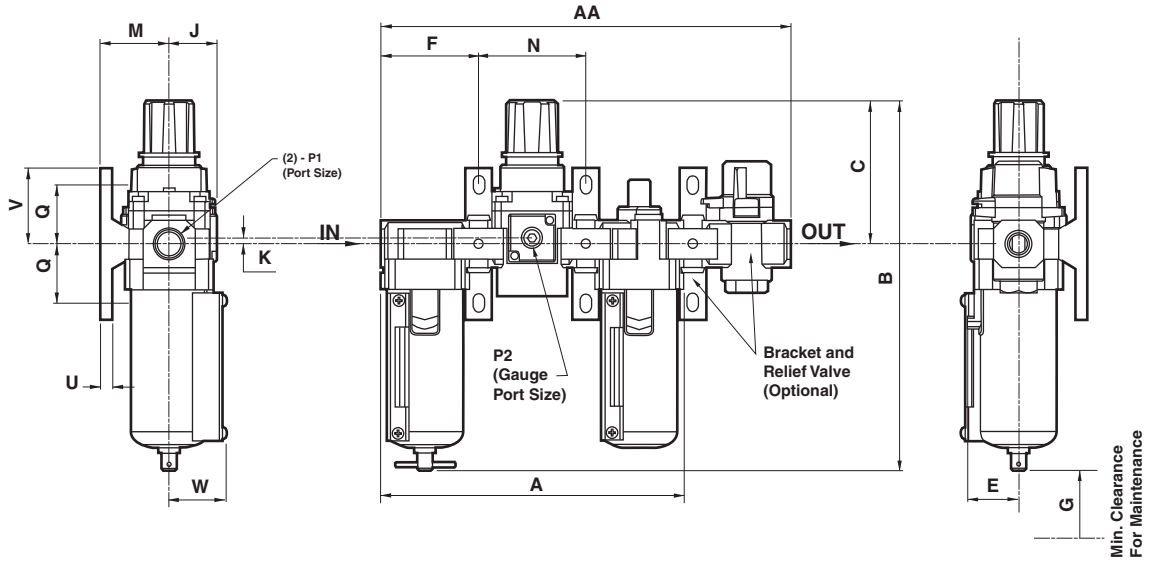

AC-A

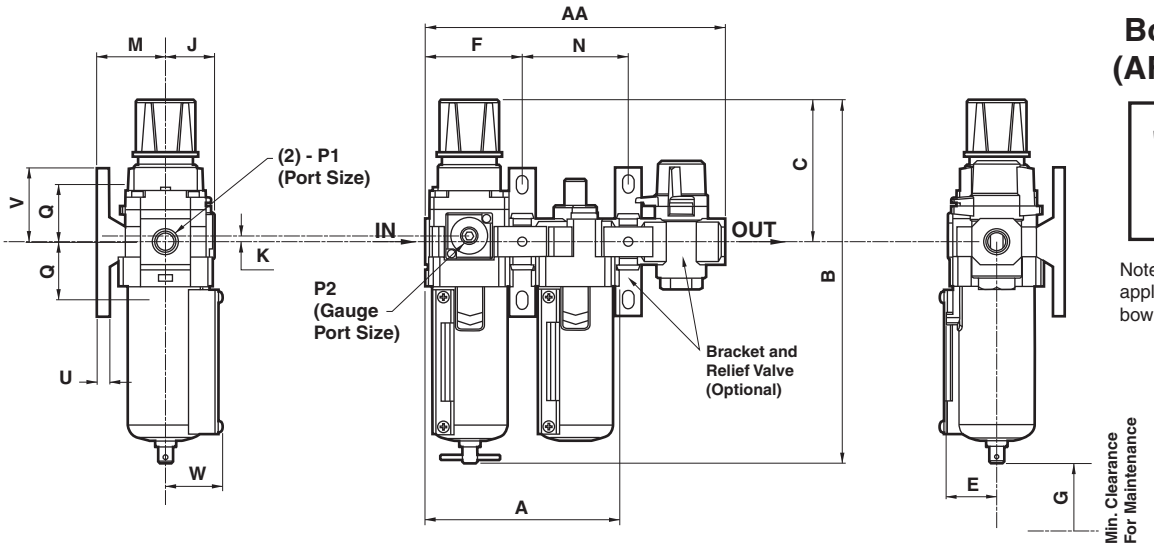

Bowl Detail (AF20/AW20)

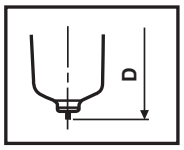

Note: Sight glass not applicable to all size 20 bowls.

AC-B

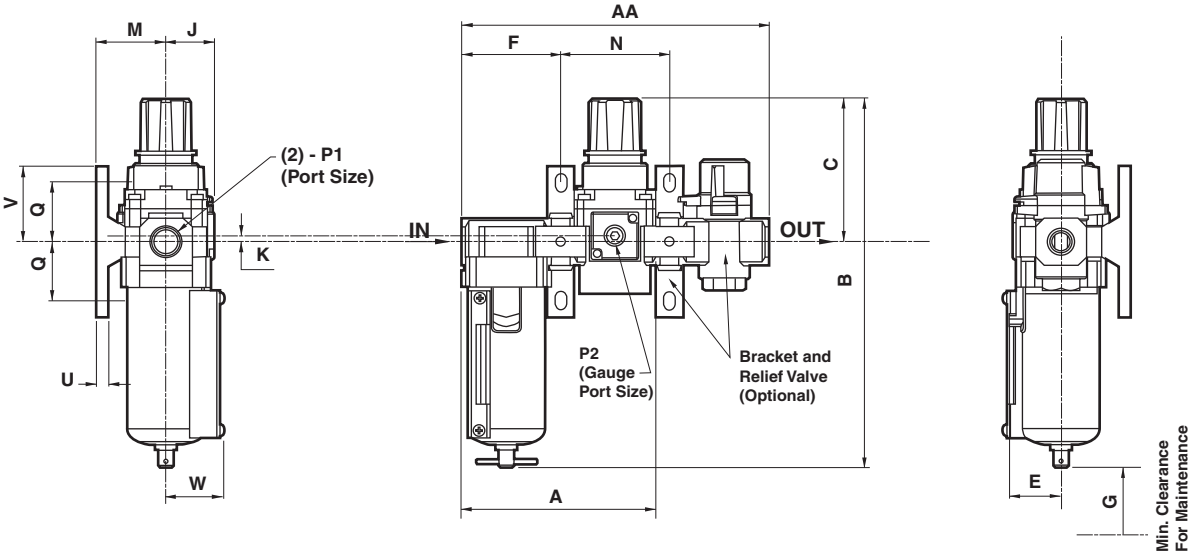

Notes: Filter & Filter Regulator Bowls depict manual drain, see individual sections for details with auto-drain options.

How To Order

AF 30 — N 03 D — 8 Z - X480

- Filter
- Body Size
- NPT Threads
- Port Size
- Bowl
- Accessories
- Name Plate, Caution Plate On Bowl in psi, °F
- With External Epoxy Coating, Stainless Fasteners

Symbol	Size
20	1/8
30	3/8
40	1/2

Symbol	Port Size	Applicable Body Size
02	1/4	20
03	3/8	30
04	1/2	40

Note: Other sizes, thread forms, options, etc. may be possible, please contact SMC for availability.

Symbol	Description	Applicable Body Size
2	Metal Bowl	20
8	Metal Bowl With Sight Glass	30, 40

Symbol	Description	Applicable Body Size
Nil	None	All
B*	Mounting Bracket	All
C	Float Auto Drain (N.C.)	30, 40
D	Float Auto Drain (N.O.)	30, 40

*Note: Bracket is not assembled and is supplied loose at time of shipment.

Specifications

Body size	20	30	40
Operating specifications	Same as standard - see catalog ES40-42D or NC160A		
Port size	1/4” NPT	3/8” NPT	1/2” NPT
Auto drain port	N/A	1/4” NPT	
Bowl type	Metal	Metal with sight gauge	
Body material	Die cast aluminum		
Bowl material	Die cast aluminum		
Body, Bowl surface treatment	Epoxy resin coating		
Manual drain (AF, AW)	POM		
External screws	Stainless steel 410		
Individual mounting brackets	Epoxy coated steel		
Sight glass hardware	Stainless steel 304		

Dimensions - Refer to drawings on page 5

Standard

mm

Model	Port Size	Dimensions																	Mounting Bracket Kit (Optional)
	A	C	D	E	F	G	H	J	K	L	M	N	P	Q	R	S	T	W	
AF20	NPT 1/4	40	97	10	40	—	18	30	27	22	5.4	8.4	40	2.3	26	32	M4 X 0.7	—	AF20P-050AS-X480
AF30	NPT 3/8	53	149	14	53	57	16	41	40	23	6.5	8	53	2.3	35	44	M4 X 0.7	34.5	AF30P-050AS-X480
AF40	NPT 1/2	70	185	18	70	73	17	50	54	26	8.5	10.5	70	2.3	47	60	M5 X 0.8	41	AF40P-050AS-X480

Auto Drain

mm

Model	Port Size	Dimensions																	Mounting Bracket Kit (Optional)
	A	C	D	E	F	G	H	J	K	L	M	N	P	Q	R	S	T	W	
AF30	NPT 3/8	53	158	14	53	57	16	41	40	23	6.5	8	53	2.3	35	44	M4 X 0.7	34.5	AF30P-050AS-X480
AF40	NPT 1/2	70	194	18	70	73	17	50	54	26	8.5	10.5	70	2.3	47	60	M5 X 0.8	41	AF40P-050AS-X480

Standard
(Manual Drain)

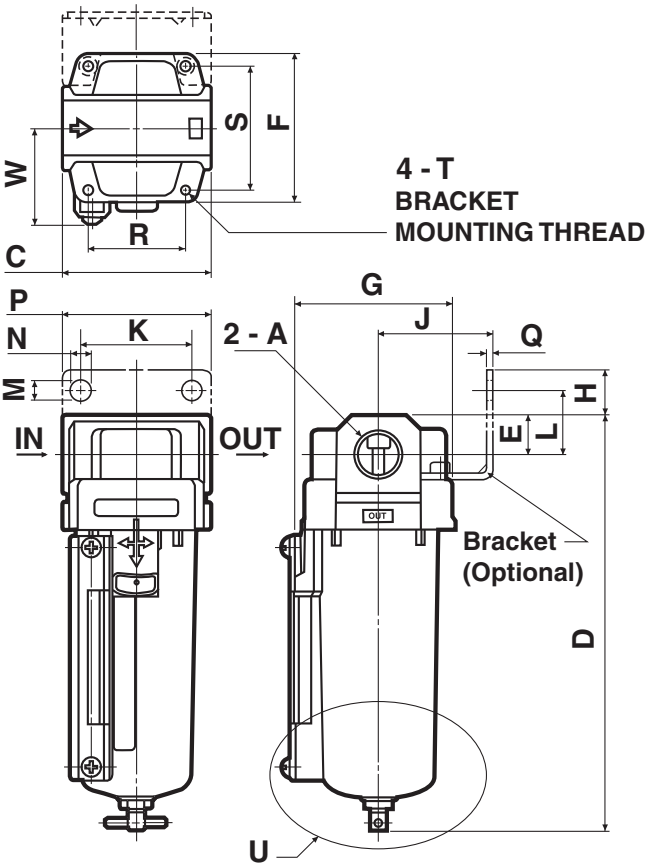

Bowl Detail U
(AF20)

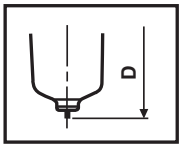

Note: Sight glass not applicable to AF20.

With Auto Drain

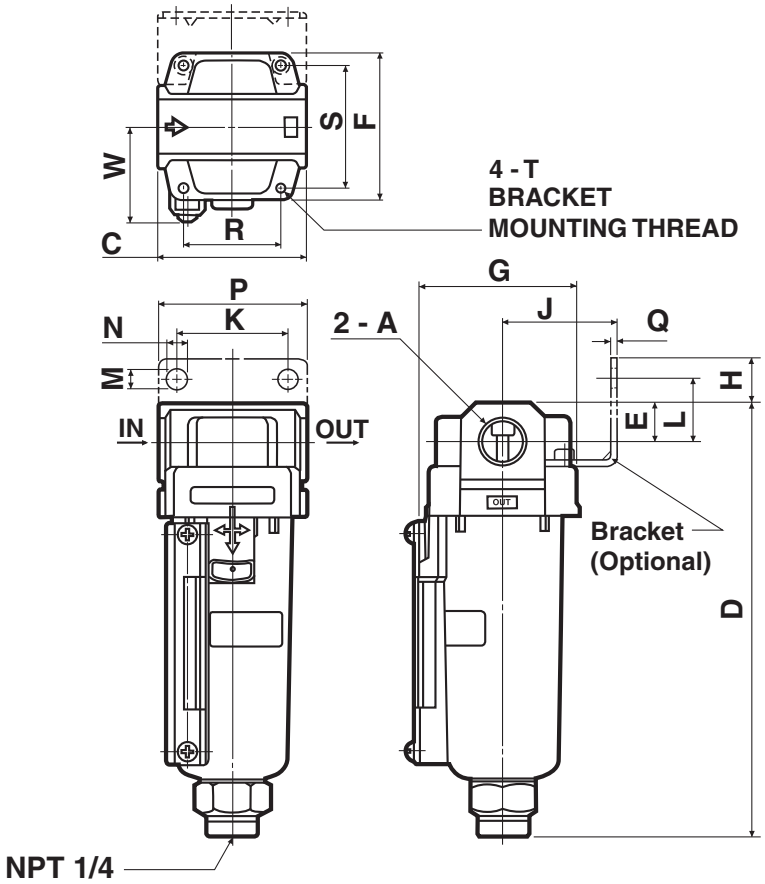

How To Order

AW 30 — N 03 D — 8 Z - X48

- AW: Filter - Regulator
- 30: Body Size
- N: NPT Threads
- 03: Port Size
- D: Accessories
- 8: Bowl
- Z: Name Plate, Caution Plate On Bowl in psi, °F
- X48: With External Epoxy Coating, Stainless Fasteners

Body Size

Symbol	Size
20	1/8
30	3/8
40	1/2

Bowl

Symbol	Description	Applicable Body Size
2	Metal Bowl	20
8	Metal Bowl With Sight Glass	30, 40

Port Size

Symbol	Port Size	Applicable Body Size
02	1/4	20
03	3/8	30
04	1/2	40

Accessories

Symbol	Description	Applicable Body Size
Nil	None	All
B*	Mounting Bracket	All
C	Float Auto Drain (N.C.)	30, 40
D	Float Auto Drain (N.O.)	30, 40
H*	Panel Mount Nut	All

Note: Other sizes, thread forms, options, etc. may be possible, please contact SMC for availability.

*Note: Bracket and/or panel mount nut are not assembled and are supplied loose at time of shipment.

Specifications

Body size	20	30	40
Operating specifications	Same as standard - see catalog ES40-42D or NC160A		
Port size	1/4" NPT	3/8" NPT	1/2" NPT
Auto drain port	N/A	1/4" NPT	
Bowl type	Metal	Metal with sight gauge	
Body material	Die cast aluminum		
Bowl material	Die cast aluminum		
Body, Bowl surface treatment	Epoxy resin coating		
Bonnet	Polyacetal		
Manual drain (AF, AW)	POM		
External screws	Stainless steel 410		
Individual mounting brackets	Epoxy coated steel		
Panel mount nut	POM		
Sight glass hardware	Stainless steel 304		

Accessories

Model	Mounting Bracket Kit (Optional)	Panel Mounting Nut (Optional)
AW20	AW20P-270AS-X480	AR20P-260S
AW30	AR30P-270AS-X480	AR30P-260S
AW40	AR40P-270AS-X480	AR40P-260S

Dimensions - Refer to drawings on page 7

Standard

mm

Model	Port Size	Gauge Port	Dimensions																		
	A	C	D	DD	E	F	H	J	K	L	Q	S	T	U	V	W	X	Y	Z	AA	CC
AW20	NPT 1/4	NPT 1/8	40	—	—	70(max.73)	5	157(max.160)	52	30	44	5.4	15.4	34	55	2.3	M28 X 1	30	6	14	28.5
AW30	NPT 3/8	NPT 1/8	53	34.5	30	83(max.86)	3.5	218(max.221)	59	41	46	6.5	8	40	53	2.3	M38 X 1.5	31	7	19	38.5
AW40	NPT 1/2	NPT 1/4	70	41	38	88(max.92)	1.5	255(max.259)	75	50	54	8.5	10.5	54	70	2.3	M42 X 1.5	35.5	7	21	42.5

Auto Drain

mm

Model	Port Size	Gauge Port	Dimensions																		
	A	C	D	DD	E	F	H	J	K	L	Q	S	T	U	V	W	X	Y	Z	AA	CC
AW30	NPT 3/8	NPT 1/8	53	34.5	30	83(max.86)	3.5	239(max.242)	59	41	46	6.5	8	40	53	2.3	M38 X 1.5	31	7	19	38.5
AW40	NPT 1/2	NPT 1/4	70	41	38	88(max.92)	1.5	276(max.280)	75	50	54	8.5	10.5	54	70	2.3	M42 X 1.5	35.5	7	21	42.5

Standard
(Manual Drain)

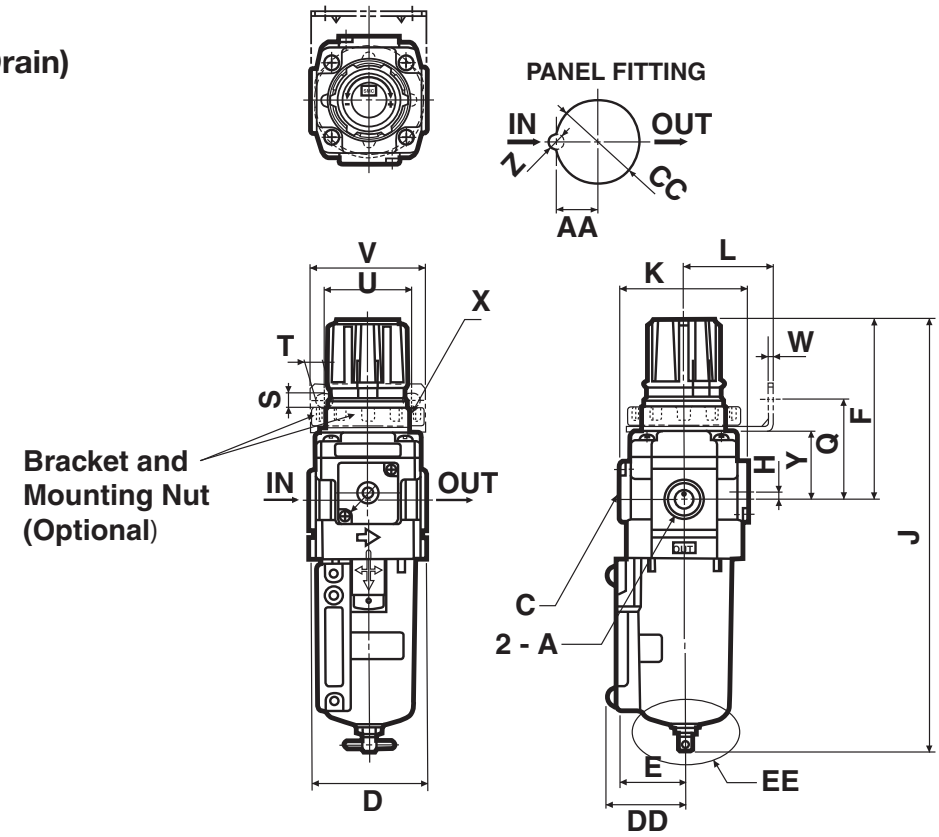

Bowl Detail EE
(AW20)

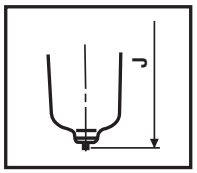

Note: Sight glass not applicable to AW20.

With Auto Drain

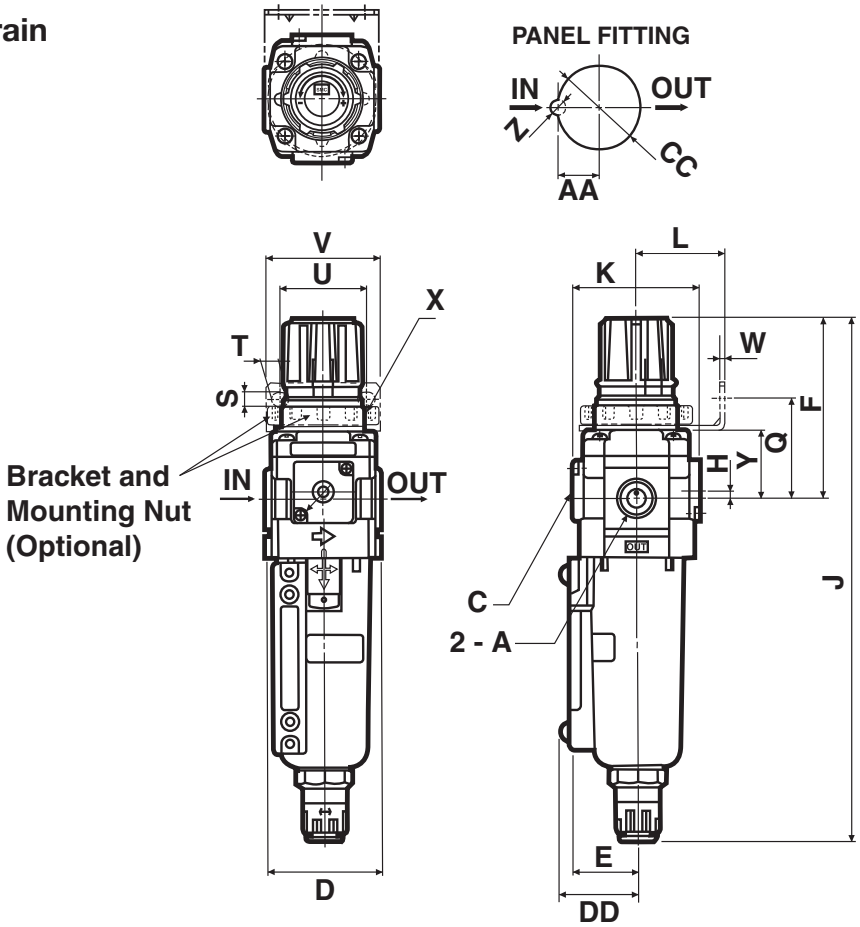

How To Order

AR 20 — N 02 B — Y Z - X48

- Regulator
- Body Size
- NPT Threads
- Port Size
- Accessories
- Handle Orientation
- Name Plate, Caution Plate On Bowl in psi, °F
- With External Epoxy Coating, Stainless Fasteners

Symbol	Size
20	1/8
30	3/8
40	1/2

Symbol	Port Size	Applicable Body Size
02	1/4	20
03	3/8	30
04	1/2	40

Symbol	Description
Nil	Handle Down
Y	Handle Up

Note: Other sizes, thread forms, options, etc. may be possible, please contact SMC for availability.

Symbol	Description
Nil	None
B*	Mounting Bracket
H*	Panel Mount Nut

*Note: Bracket and/or panel mount nut are not assembled and are supplied loose at time of shipment.

Specifications

Body size	20	30	40
Operating specifications	Same as standard - see catalog ES40-42D or NC160A		
Port size	1/4" NPT	3/8" NPT	1/2" NPT
Body material	Die cast aluminum		
Body, Bowl surface treatment	Epoxy resin coating		
Bonnet	Polyacetal		
Individual mounting brackets	Epoxy coated steel		
Panel mount nut	POM		

Dimensions

mm

Model	Port Size	Gauge Port	Dimensions																		
	A	C	D	E	F	H	J	K	L	M	P	Q	S	T	U	V	W	X	Y	Z	AA
AR20	NPT 1/4	NPT 1/8	40	57	26.5	-2	91(max.94)	30	65	37.5	44	5.4	15.4	34	55	2.3	M28 X 1	6	14	28.5	25
AR30	NPT 3/8	NPT 1/8	53	59	31	3.5	113(max.116)	41	66	37.5	46	6.5	8	40	53	2.3	M38 X 1.5	7	19	38.5	31
AR40	NPT 1/2	NPT 1/4	70	68	36	3.5	124(max.128)	50	74	42.5	54	8.5	10.5	54	70	2.3	M42 X 1.5	7	21	42.5	35.5

Accessories

Model	Mounting Bracket Kit (Optional)	Panel Mounting Nut (Optional)
AR20	AR20P-270AS-X48	AR20P-260S
AR30	AR30P-270AS-X48	AR30P-260S
AR40	AR40P-270AS-X48	AR40P-260S

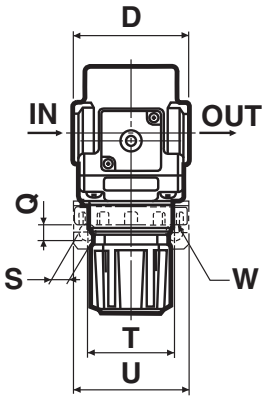

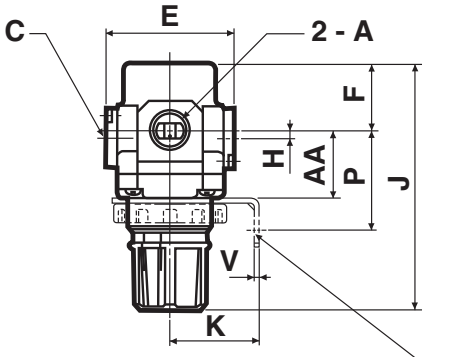

Bracket and Mounting Nut (Optional)

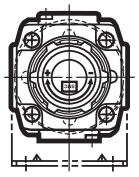

PANEL FITTING

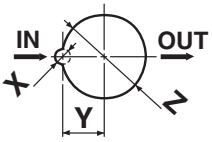

Plate Thickness
AR20, 30: Max 3.5
AR40: Max 5

How To Order

AL 20 — N 02 B — 2 Z - X480

- AL: Lubricator
- 20: Body Size

Symbol	Size
20	1/8
30	3/8
40	1/2

- N: NPT Threads
- 02: Port Size

Symbol	Port Size	Applicable Body Size
02	1/4	20
03	3/8	30
04	1/2	40

- B: Accessories

Symbol	Description	Applicable Body Size
Nil	None	All
B*	Mounting Bracket	All

*Note: Bracket is not assembled and is supplied loose at time of shipment.

- 2: Bowl

Symbol	Description	Applicable Body Size
2	Metal Bowl	20
8	Metal Bowl With Sight Glass	30, 40

- Z: Name Plate, Caution Plate On Bowl in psi, °F
- X480: With External Epoxy Coating, Stainless Fasteners

Note: Other sizes, thread forms, options, etc. may be possible, please contact SMC for availability.

Specifications

Body size	20	30	40
Operating specifications	Same as standard - see catalog ES40-42D or NC160A		
Port size	1/4” NPT	3/8” NPT	1/2” NPT
Bowl type	Metal	Metal with sight gauge	
Body material	Die cast zinc	Die cast aluminum	
Bowl material	Die cast aluminum		
Body, Bowl surface treatment	Epoxy resin coating		
Individual mounting brackets	Epoxy coated steel		
Fill plug	Stainless steel 304		
Sight dome	Polycarbonate		
Sight glass hardware	Stainless steel 304		

Dimensions

mm

Model	Port Size	Dimensions																	Mounting Bracket Kit (Optional)
	A	C	D	E	F	G	H	J	K	L	M	N	P	Q	R	S	T	W	
AL20	NPT 1/4	40	121	36	40	—	28	30	27	22	5.4	8.4	40	2.3	26	32	M4 X 0.7	—	AF20P-050AS-X480
AL30	NPT 3/8	53	162	38	53	57	30	41	40	23	6.5	8	53	2.3	35	44	M4 X 0.7	34.5	AF30P-050AS-X480
AL40	NPT 1/2	70	196	40	70	73	35	50	54	26	8.5	10.5	70	2.3	47	60	M5 X 0.8	41	AF40P-050AS-X480

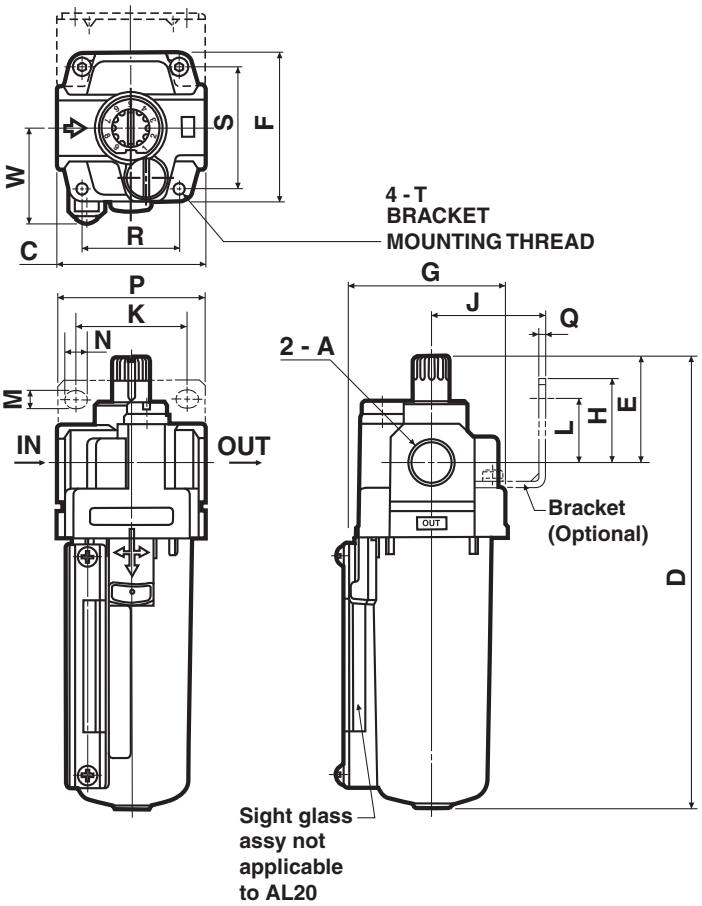

Residual Pressure Relief 3 Port Valve (V)

With the use of a 3 port valve for residual pressure release, pressure left in the line can be easily exhausted.

JIS Symbol

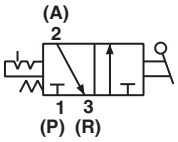

Model	Port Size		Effective area mm² (Cv)	
	IN, OUT	EXH	IN to OUT	OUT to EXH
VHS20	1/4	1/8	14 (0.76)	16 (0.87)
VHS30	3/8	1/4	31 (1.68)	29 (1.57)
VHS40	1/2	3/8	55 (2.98)	42 (2.28)

Paint color (Standard) Handle: Red Body: Platinum silver
Use an air filter on the IN side for operating protection.

How To Order

VHS 30 — N 02 — Z - X513

- **Residual Pressure Relief 3 Port Valve**
- **Body Size**

Symbol	Applicable Model
20	AC21
30	AC31
40	AC41

- **Thread Type**

N	NPT

- **Body Size**

Symbol	Port Size	Body Size		
		20	30	40
02	1/4	●		
03	3/8		●	
04	1/2			●

- **Name Plate In Imperial Units (PSI, °F)**
- **With External Epoxy Coating, Stainless Fasteners**

Note: Other sizes, thread forms, options, etc. may be possible, please contact SMC for availability.

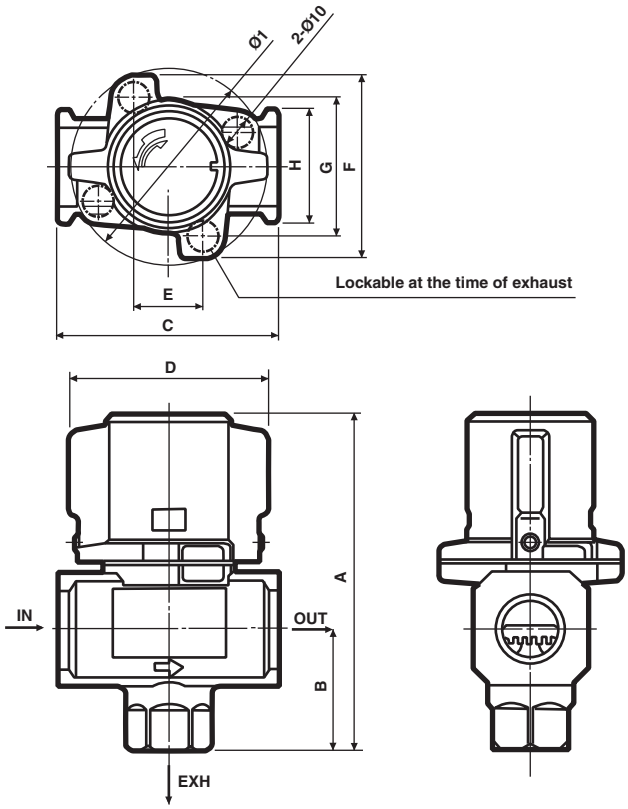

Dimensions

mm

Model	A	B	C	D	E	F	G	H	I
VHS20	59	20	40	34	—	45	33	28	45
VHS30	78	29	53	46	—	55	42	30	55
VHS40	107	39	70	63	22	58	44	36	63

Caution

- If a stop valve or a silencer is connected to the exhaust port of VHS20/30, the effective sectional area should be larger than the figure indicated in the following table, to prevent malfunction caused by back pressure. (This is not applicable to VHS40)

Model	Effective area (mm²)
VHS20	5
VHS30	5

- If unit is to be used in a washdown application, avoid directing fluid into the exhaust port.

Spacer

Epoxy Coated Aluminum,
Stainless Screws,
NBR Seals

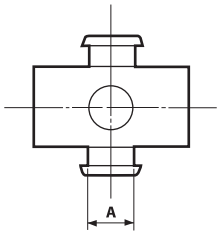

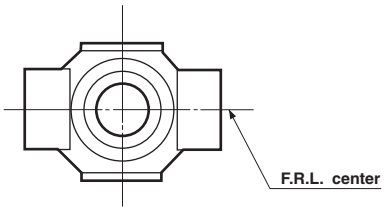

Dimensions

mm

Model	A
Y20-T4	10
Y30-T4	11
Y40-T4	14

Interface With T Bracket

Epoxy Coated Aluminum, Stainless Screws,
NBR Seals

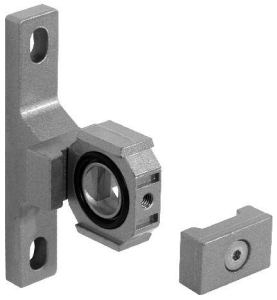

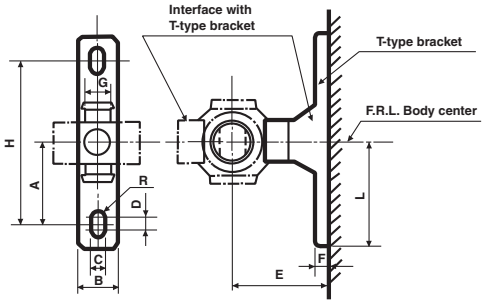

Dimensions

mm

Interface With T Bracket	A	B	C	D	E	F	G	H	R	L	Applicable Models
Y20T-T4	24	15	5.5	3	30	5	10	48	2.75	33	AC21*-X2217
Y30T-T4	35	16	7	4	41	7	11	70	3.5	45	AC31*-X2217
Y40T-T4	40	22	9	4	50	7	14	80	4.5	50	AC41*-X2217

Other Available Air Line Products with Epoxy Coating/Stainless Hardware

Series	Description	Option Code
(N)AV	Soft Start Valve	X480
AMG	Water Removal Filter	X229
AR20-60	Regulator with Stainless T-handle, aluminum bonnet for UV resistance	X480
AVL	Soft Start Valve with Pilot Lock-Out	X480
AW20-40	Filter-Regulator with Stainless T-handle, aluminum bonnet for UV resistance	X480
E*00	Piping Adapter	X480
Y*10	T Interface	X480
Y*4	Cross Interface	T3

Please contact SMC for ordering information

Salt Spray Test Results (for reference)

1. Test Conditions

1) Method: In compliance with ASTM B117-07a (JIS Z 2371), leave parts in a salt spray test chamber, and compare rust generation.

2) Conditions: Temperature: 95˚F (35˚C) Salt Water Concentration: 5%

3) Time: 1000 hours [Frequency: 0hr, 24hrs, 48hrs, 72hrs, 96hrs, 168hrs, 240hrs, 480hrs, 720hrs, 1000hrs]

4) Samples: Parts for AF and AW30 (See Figure 1.)

- Part descriptions: 4 parts (1) Body (2) Drain cock (3) Small screw for level gauge (4) Bonnet screw
- Types: 2 Types A) Standard B) Special X480 (Coated with epoxy resin [External metal parts are made of SUS])
- Refer to Table 1 for part materials and treatments. *Quantity; 2 pieces for each

2. Test Results

Table 1 Salt spray resistance test results

No.	Description	Type		Material & Treatment	Results
1	Body	A	Standard	Material: Die Cast Aluminum Treatment: Platinum Coating	Rusted in 480hrs Part of coating swelled
		B	Special X480	Material: Die Cast Aluminum Treatment: Platinum & Epoxy Coating	Not rusted in 1000hrs Part of coating swelled
2	Drain cock	A	Standard	Material: Die Cast Aluminum Treatment: Zinc Chromate	Rusted in 24hrs
		B	Special X480	Material: SUS	Not rusted in 1000hrs
3	Cross recessed round head screw for metal bowl with level gauge	A	Standard	Material: Steel Treatment: Nickel Plating	Rusted in 24hrs
		B	Special X480	Material: SUS	Not rusted in 1000hrs
4	Self-tapping screw for AR and AW bonnet	A	Standard	Material: Steel Treatment: Zinc Chromate	Rusted in 24hrs
		B	Special X480	Material: SUS	Not rusted in 1000hrs

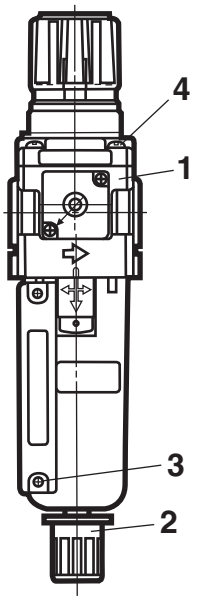

Figure 1

Body

Standard | X480 Epoxy Resin Coating

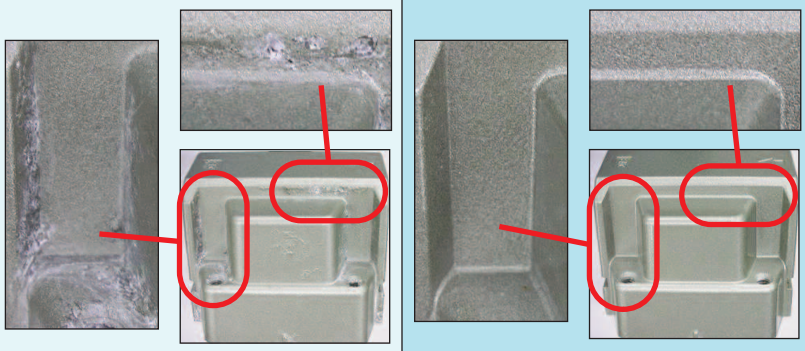

Screw

Standard | X480 Stainless Steel

Drain Cock

Standard | X480 Stainless Steel

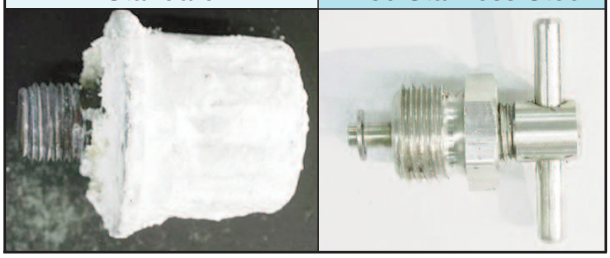

Caution! To ensure the safest possible operation of this product, please be sure to read thoroughly the “Safety Instructions” in our “Best Pneumatics” catalog before use.

©2009 SMC Corporation All Rights Reserved