TAP1000 Series

1000 Watt Heat Sinkable Planar

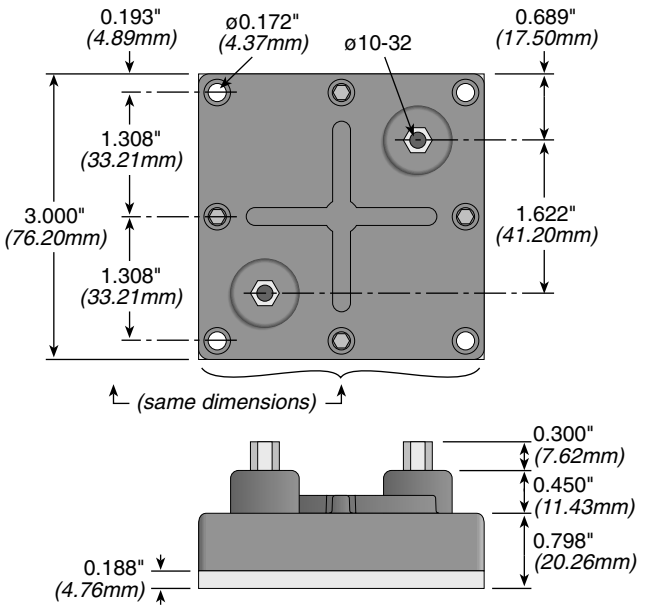

The TAP1000 Series delivers 1000 watts of continuous power when properly mounted to a liquid cooled heat sink (based on 70°C ambient temperature)

Applications include power conditioning, power distribution, power conversion, and power control.

FEATURES

- Dissipates 1000 Watts @ 70°C Mounting Plate Temperature
- High Energy Rating
- Low Inductance
- Resistor Element Electrically Isolated
- High Dielectric Strength
- Small Footprint

APPLICATIONS

- Power semiconductor balancing
- Motor control
- Inrush Current Limiting

SPECIFICATIONS

Material

Resistor Element: Thick Film on Alumina Substrate

Electrical

Power Rating: 1000 watt @ 70°C Mounting Plate

Resistance Values: 2.5Ω to 50Ω

Resistance Tolerance: +10% std.

Max Operating Voltage: 2000VDC

Temperature Coefficient: ± 250 PPM/°C

Dielectric Strength: 6KV Standard, up to 12KV available

Operating Temperature Range: -55°C to 150°C

Case

Terminal Screws: #10-32

Max Contacts Torque: 10 in-lb

Mounting Screws: #8-32

Max Mounting Torque: 15 in-lb

Creepage Distance: 50mm ± 1mm (min)

Thermal Resistance: 0.05°C / Watt

DERATING CURVE

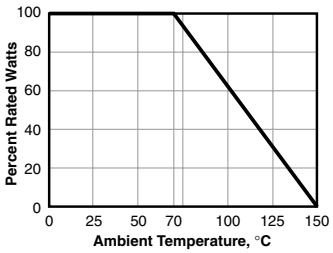

PERFORMANCE DATA

Test	Rating Continuous	Rating Pulse
Rated Power, max. current and heat sink plate temperature limited	1000W	
Operating Voltage	$\sqrt{P*R}$	N/A
Max. Applied Voltage, ohms law limited	223V	2000VDC
Max. Current	10A	53.33A
Critical Resistance; below this resistance max power has to be de-rated due to exceeding max current	10 ohms	

Test	Method	Maximum ΔR
Short Time Overload	1.14 x $\sqrt{P*R}$ / 10 sec @ 70°C	Max % ΔR_{sto} = ±(2% + 0.05Ω)
Moisture Resistance	1000 hrs @ 40°C, 90-95% RH	≤1%
Thermal Shock	MIL-STD-202, Method 107	MIL-STD-202, Method 107
Vibration, elec.	MIL-STD-202, Method 201	±2% Resistance
Vibration, mech.	MIL-STD-202, Method 201	No Loose Terminal Screws
Load Life, 1000 Hrs	90 min ON / 30 min OFF	≤1%
Pulse Tolerance 20,000 Pulses	52µF @ 2KV / 60 sec intervals, 104J	≤1%
Dielectric Strength	6KVDC for 1 minute	≤1%

ORDERING INFORMATION

RoHS Compliant

TA1K0PH2R50KE

- **Style**
- **Package Type**
- **Resistance** 2.5Ω = 2R50, 50Ω = 50R0
- **Tolerance** K = 10% (standard), L = 20%

Check product availability at **www.ohmite.com**

APPLICATION NOTES

Proper heat sinking techniques are essential to performance of a TAP1000 resistor. Pleased follow these guidelines when designing TAP1000 system:

- Heat sink compound must always be used. Phase change material is preferred over silicon pastes.
- Heats sink plate (base plate of the resistor) temperature must be monitored to establish proper de-rating. Best technique is to attach a thermocouple to the side of the base plate of the resistor. Temperature of plastic housing or heat sink cannot be used to establish rating of the resistor. Usage of laser thermometers should be avoided.
- Due to very high power density, only liquid cooled heat sinks are recommended for applications when >300W power rating is desired.
- Properly designed heat sink should have more than 2 cooling pipes under the surface of the TAP1000 resistor. Hydroblok-1000, a 4 pass aluminum heat sink (http://www.d6industries.com/heatsinks.htm) is an example of properly designed heat sink.

STANDARD PART NUMBERS FOR TAP1000 SERIES

Ohms	Part Number 10% Tolerance	Ohms	Part Number 10% Tolerance
3	TA1K0PH3R00KE	15	TA1K0PH15R0KE
4	TA1K0PH4R00KE	20	TA1K0PH20R0KE
5	TA1K0PH5R00KE	25	TA1K0PH25R0KE
8	TA1K0PH8R00KE	30	TA1K0PH30R0KE
10	TA1K0PH10R0KE	50	TA1K0PH50R0KE