PART NUMBER DATA

CIRCUITS	PART NUMBER	ENGINEERING NUMBER	COLOR	PART NUMBER	ENGINEERING NUMBER	COLOR	"A" IN	"A" mm	"B" IN	"B" mm
2	391002502	M800-04-02-5-M1	WHITE	391002522	M800-04-02-1-M1	BLACK	.98	25.00	.591	15.00
3	391002503	M800-04-03-5-M1	WHITE	391002523	M800-04-03-1-M1	BLACK	1.57	40.00	1.181	30.00
4	391002504	M800-04-04-5-M1	WHITE	391002524	M800-04-04-1-M1	BLACK	2.17	55.00	1.772	45.00
5	391002505	M800-04-05-5-M1	WHITE	391002525	M800-04-05-1-M1	BLACK	2.76	70.00	2.362	60.00
6	391002506	M800-04-06-5-M1	WHITE	391002526	M800-04-06-1-M1	BLACK	3.35	85.00	2.953	75.00
7	391002507	M800-04-07-5-M1	WHITE	391002527	M800-04-07-1-M1	BLACK	3.94	100.00	3.543	90.00
8	391002508	M800-04-08-5-M1	WHITE	391002528	M800-04-08-1-M1	BLACK	4.53	115.00	4.134	105.00
9	391002509	M800-04-09-5-M1	WHITE	391002529	M800-04-09-1-M1	BLACK	5.12	130.00	4.724	120.00
10	391002510	M800-04-10-5-M1	WHITE	391002530	M800-04-10-1-M1	BLACK	5.71	145.00	5.315	135.00
11	391002511	M800-04-11-5-M1	WHITE	391002531	M800-04-11-1-M1	BLACK	6.30	160.00	5.906	150.00
12	391002512	M800-04-12-5-M1	WHITE	391002532	M800-04-12-1-M1	BLACK	6.89	175.00	6.496	165.00

C5

REF. LAST 2 DIGITS OF PART NUMBER EQUAL CIRCUIT COUNT

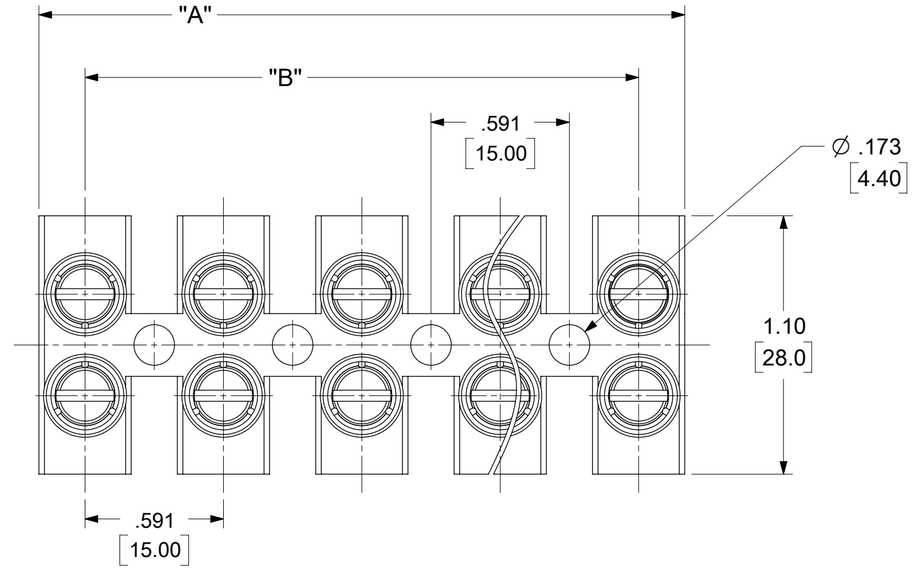

NOTE: IF THIS PRODUCT IS STORED IN AN ENVIRONMENT WITH A RELATIVE HUMIDITY OF LESS THAN 50%, MOISTURE MUST BE ADDED. REFER TO TECHNICAL ADVISORY AS 45499-001 FOR INSTRUCTIONS.

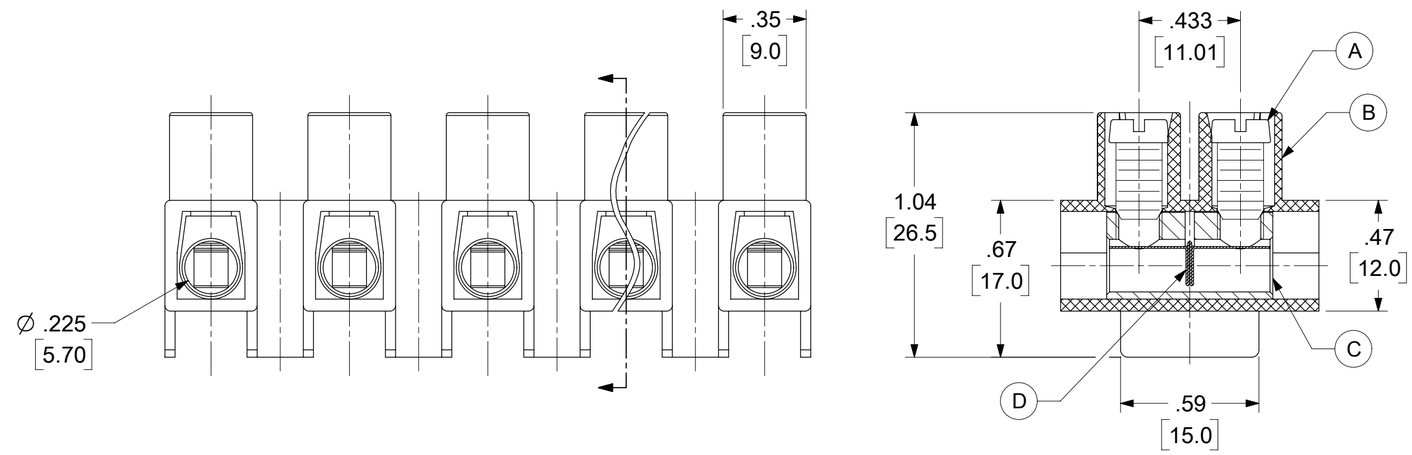

ENGINEERING NUMBER LEGEND

M800 - 04 - XX - X - M1

SERIES — M800
PITCH = 12.0MM — 04
POLES — XX
COLOR — X
HIGH PROFILE — M1

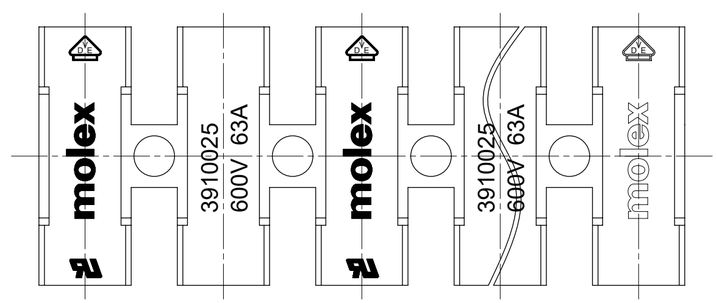

SPECIFICATIONS

1. MATERIAL:
   (A). SCREW: STEEL, M3, ZINC PLATED
   (B). BODY : PA66, UL94 V-0
   (C). CAGE: BRASS, NICKEL PLATED
   (D). TERMINAL: STAINLESS STEEL
2. RATING: 600V, 63 AMPS
3. WIRE RANGE: 14-6 AWG
4. MAX TORQUE: 20.0 IN LBS
5. DIELECTRIC VOLTAGE WITHSTAND: DC 3000V FOR 1 MINUTE
6. INSULATION RESISTANCE: DC 1000V, 100GΩ
7. RATED IMPULSE VOLTAGE: 6000V, PLUS AND MINUS 5 TIMES EACH
8. STRIP LENGTH: .31 IN. (8.0mm)
9. OPERATING TEMPERATURE: -40°C TO +105°C
10. CONTACT RESISTANCE: < 3mΩ
11. ALL DIMS SHOWN ARE FOR REFERENCE ONLY

TOLERANCES

MM	TOL	INCH	TOL
0-6	±0.25	0-.24	±.010
>6-30	±0.40	.24-1.18	±.016
>30-120	±0.50	1.18-4.76	±.020
>120	±0.80	>4.76	±.031

FUNCTIONAL SYMBOLS
FA = 0
FC = 0
FP = 0

DIVISIONAL SYMBOLS

THIS DRAWING CONTAINS INFORMATION THAT IS PROPRIETARY TO MOLEX ELECTRONIC TECHNOLOGIES, LLC AND SHOULD NOT BE USED WITHOUT WRITTEN PERMISSION

DIMENSION UNITS: INCH/MM
SCALE: 2:1

GENERAL TOLERANCES (UNLESS SPECIFIED)

	MM	INCH
4 PLACES	± ---	± ---
3 PLACES	± ---	± SEE CHART
2 PLACES	± SEE CHART	± SEE CHART
1 PLACE	± SEE CHART	± ---
0 PLACES	± ---	± ---
ANGULAR TOL	± ---	

DRAFT WHERE APPLICABLE MUST REMAIN WITHIN DIMENSIONS

CURRENT REV DESC: ADDED PNS OF BLACK COLOR PARTS

EC NO: 647743
DRWN: ABENJAMINLW 2020/10/23
CHK'D: DACHAMMER 2020/10/23
APPR: JFMURPHY 2020/11/02

INITIAL REVISION:
DRWN: RSTONE 2014/07/11
APPR: JFMURPHY 2014/07/21

THIRD ANGLE PROJECTION
DRAWING: C-SIZE
SERIES: 39100

molex

TERMINAL STRIP 15MM
HIGH PROFILE 600V

PRODUCT CUSTOMER DRAWING

DOCUMENT NUMBER	DOC TYPE	DOC PART	REVISION
SD-39100-017	PSD	001	C5

MATERIAL NUMBER	CUSTOMER	SHEET NUMBER
SEE CHART	GENERAL MARKET	1 OF 1

DOCUMENT STATUS	P1	RELEASE DATE	2020/11/02 23:37:14

FORMAT: Eng-tega-master-tb-prod-C
REVISION: B
DATE: 2020/01/14