THIS DRAWING IS UNPUBLISHED. RELEASED FOR PUBLICATION -,- .
© COPYRIGHT - By - ALL RIGHTS RESERVED.

LOC	DIST
AF	50

REVISIONS

P	LTR	DESCRIPTION	DATE	DWN	APVD
	D	REVISED PER ECR-12-013518	23NOV2012	KH	PD

1 CONTINUOUS STRIP ON REELS.

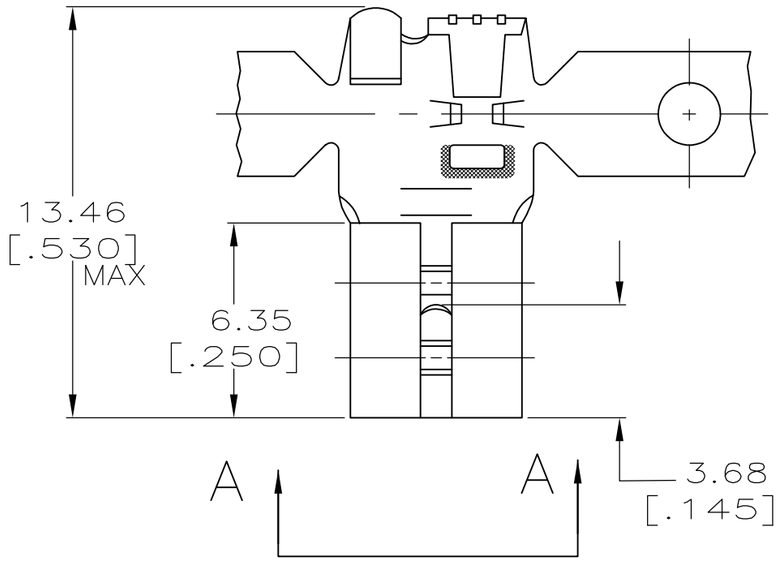

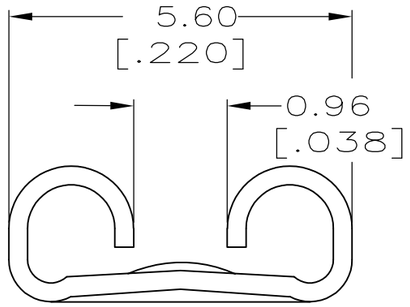

VIEW A—A

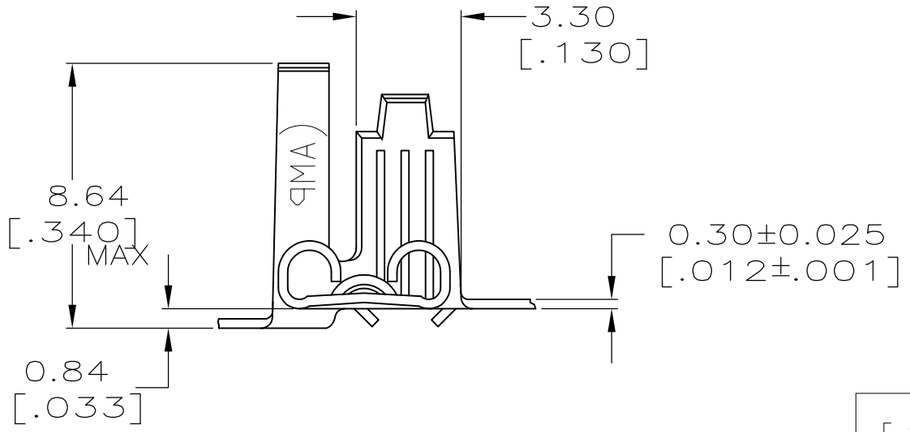

2.79–4.32 [.110–.170] DIA	0.5–1.3mm² [20–16] AWG	TIN	0.51 [.020]	63417–2
		–		63417–1
INSUL RANGE	WIRE SIZE	FINISH	MATING TAB THK ±0.025 [.001]	PART NO

THIS DRAWING IS A CONTROLLED DOCUMENT.

DIMENSIONS: mm [INCHES]

TOLERANCES UNLESS OTHERWISE SPECIFIED:

0 PLC	± –
1 PLC	± –
2 PLC	± 0.25 [.010]
3 PLC	± –
4 PLC	± –
ANGLES	± –

MATERIAL: BRASS

FINISH: SEE TABLE

DWN	JR RUTH	12/20/85
CHK	G YETTER	12/20/85
APVD	C MAYERS	12/20/85
PRODUCT SPEC	—	
APPLICATION SPEC	—	
WEIGHT	—	

TE Connectivity

NAME: RECEPTACLE, FASTON, FLAG, 4.75 [.187] SERIES

SIZE	CAGE CODE	DRAWING NO	RESTRICTED TO
A3	00779	C-63417	—

CUSTOMER DRAWING

SCALE	SHEET	REV
5:1	1 OF 1	D