THIS COPY IS PROVIDED ON A RESTRICTED BASIS AND IS NOT TO BE USED IN ANY WAY DETRIMENTAL TO THE INTERESTS OF PANDUIT CORP.

G

PANDUIT PART NUMBER	WEIGHT
FRADC6X4	.76 LB/EACH (345g/EACH)

J

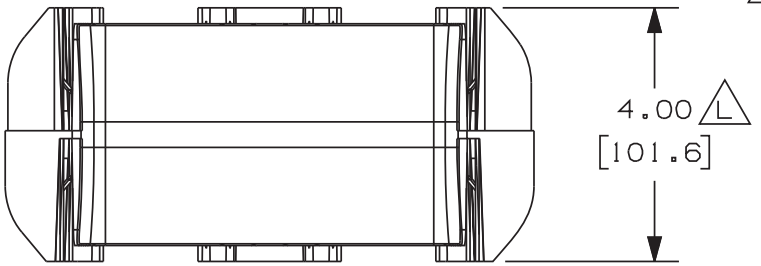

K NOTES:

1. SEE CURRENT CATALOG FOR ADDITIONAL PART SUFFIXES TO INDICATE PACKAGE QUANTITY.
2. THE FIBERRUNNER 6x4 TO ADC 4x6 FIBERGUIDE ADAPTER ALLOWS FOR THE FIBERRUNNER 6x4 CABLE ROUTING SYSTEM TO TRANSITION INTO OR OUT OF THE ADC 4x6 FIBERGUIDE SYSTEM.
3. DIMENSIONS IN PARENTHESIS ARE IN METRIC.

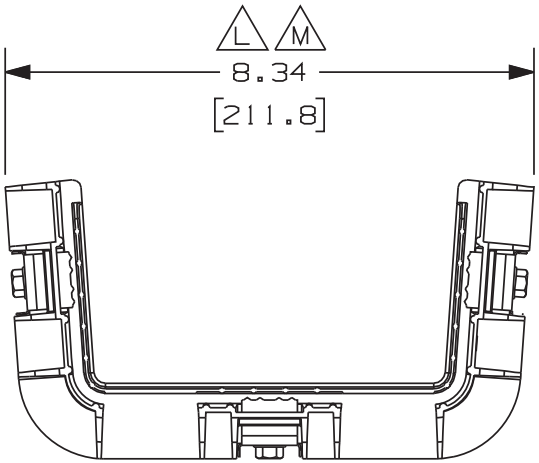

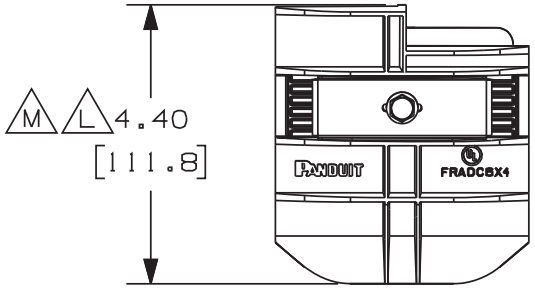

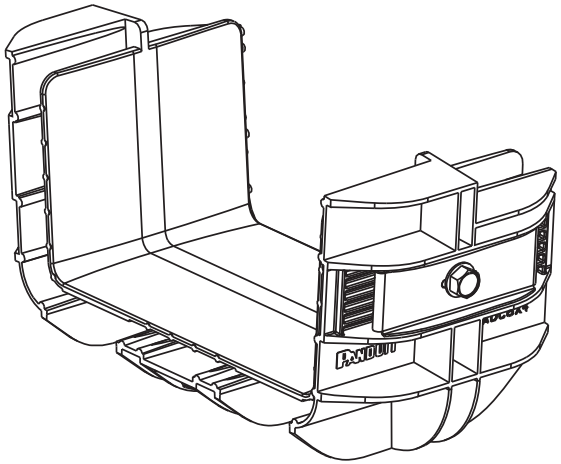

ENG. REF.: D37185EY_DC_FRADC6X4_02B.prt

CAD FILENAME/LAYERS H FRADC6X4.pdf

PANDUIT CORP TINLEY PARK, ILLINOIS

FIBERRUNNER 6x4 TO ADC 4x6 FIBERGUIDE ADAPTER (FRADC6X4)
CUSTOMER DRAWING

REV	DATE	BY	CHK	DESCRIPTION	ECN	R	CUST	SUP	GMBH
-	--------	---	---	M. REVISED DIMENSION.	--------	--	--		
-	--------	---	---	L. RELOCATED DIMENSIONS. K. REVISED GENERAL NOTES.	--------	--	--		
-	--------	---	---	J. REVISED PART WEIGHT. I. REVISED DRAWING TITLE.	--------	--	--		
4	5-19-05	MSO	RPA	H. REVISED CAD FILENAME. G. REVISED AND REDRAWN.	37185-71	RN	RN		

I UNLESS OTHERWISE SPECIFIED, DIMENSIONAL TOLERANCES ARE:
(.X) ± (.XXX) ±
(.XX) ±.03 (.8) ANGLES ±

UNLESS OTHERWISE SPECIFIED, ALL DIMENSIONS ARE GIVEN IN INCHES, THIRD ANGLE PROJECTION.

DRAWN BY JHNU
DATE 5-5-00
CHK'D LD
MAT'L: ABS
SCALE NONE
DRAWING NO. 37185-71
DWG A
SIZE