## RoHS compliant

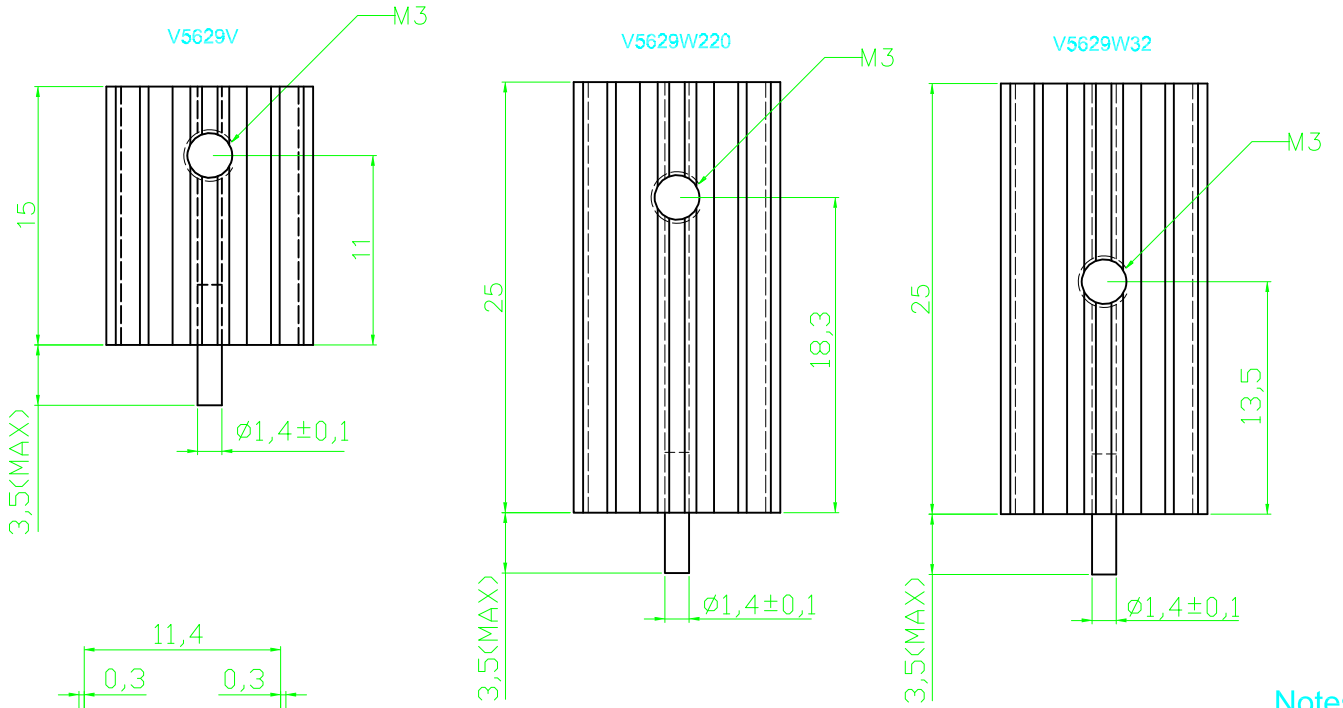


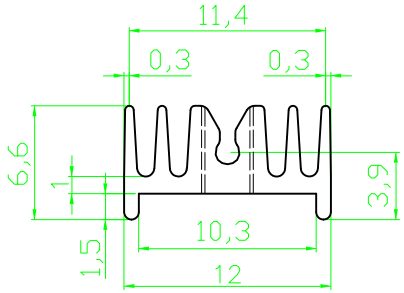


Notes
Finished:Black Anodizde

| Option | Hole Pattern | Thermal resistance(K/W) |
|---|---|---|
| V5629V | SOT-32 | 10 |
| V5629W220 | TO-220 | 8 |
| V5629W32 | SOT-32 | 7 |

| | | | | | | | | |
|---|---|---|---|---|---|---|---|---|
| Scale | 1:1 | | | | | | Date | Name |
| TOLERANCE | | | | | | Drawn | 19.03.2002 | Hellwig |
| X. | | | | | | Approved | 10.03.2010 | Andy |
| X.X | | | | | | | | |
| X.XX | | ③ | Modify drawing layout | 10.03.2010 | Alex | | | |
| DIM | TOL | ② | Update | 11.08.2009 | Dean | | | |
| X.° | | ① | Drawn | 19.03.2002 | Hellwig | | | |
| | | | | | | | | |
| Angle | TOL | Id. | Modification | Date | Name | | | |

Customer-No.

ASSMANN WSW-No. V5629x

Drawing-No. ASS 0500 HS

rev03

Replace

Sheet

ASSMANN WSW components