THESE DRAWINGS AND SPECIFICATIONS ARE THE SOLE PROPERTY OF I/O INTERCONNECT INC., U.S.A. AND SHALL NOT BE REPRODUCED, COPIED, OR USED IN ANY MANNER WITHOUT THE PRIOR WRITTEN CONSENT OF I/O INTERCONNECT INC. OR ITS AFFILIATED SUBSIDIARIES.

| DWG. NO. | ZONE | REV. | DESCRIPTION | DATE | APPROVED |
|---|---|---|---|---|---|
| XX6-52X-D | | X1 | CUSTOMER APPROVAL | 03/26/99 | E.W. |
| | | X2 | ADD RETRACTED LENGTH | 03/29/99 | E.W. |

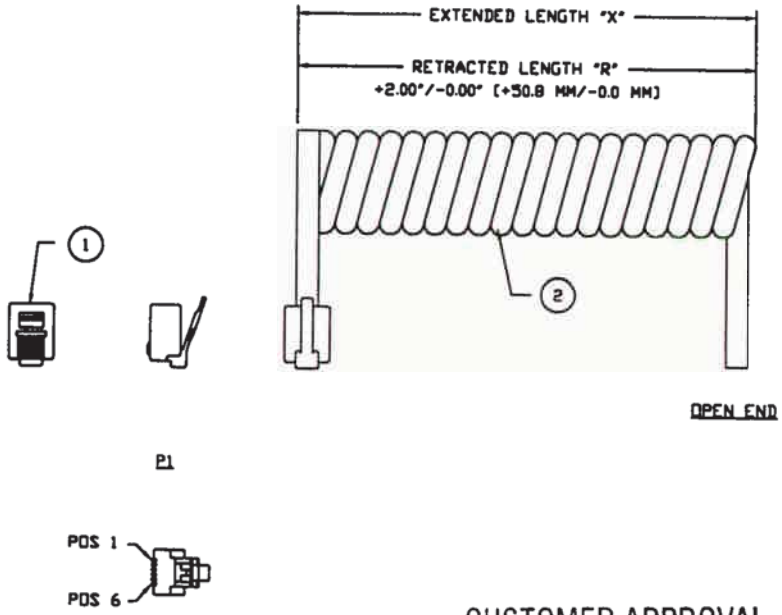


WIRE DIAGRAM

| P1 | OPEN END |
|---|---|
| 1 | WHITE |
| 2 | BLACK |
| 3 | RED |
| 4 | GREEN |
| 5 | YELLOW |
| 6 | BLUE |

CUSTOMER APPROVAL
ENGR. SIGN Matt Nemec
DATE: 4-13-99

NOTES: UNLESS OTHERWISE SPECIFIED.

1. TEST CABLE FOR ALL OPENS & SHORTS.
2. PACKAGE CABLE ASSEMBLY INDIVIDUALLY IN PLASTIC BAG. PACKAGE INDIVIDUAL BAG PER LOT NUMBER QUANTITIES.

| IDI PART NUMBER | IDI CABLE PART NUMBER | EXTENDED LENGTH "X" | RETRACTED LENGTH "R" | |
|---|---|---|---|---|
| 466-146-525-D | 121-610-022 | 14.0 FT [4.3 M] | 44.0 IN [1117.6 MM] | WHITE |
| 466-146-524-D | 121-610-012 | 14.0 FT [4.3 M] | 44.0 IN [1117.6 MM] | BLACK |
| 466-146-523-D | 121-610-002 | 14.0 FT [4.3 M] | 44.0 IN [1117.6 MM] | SILVER SATIN |
| 466-106-522-D | 121-610-021 | 10.0 FT [3.0 M] | 32.0 IN [812.8 MM] | WHITE |
| 466-106-521-D | 121-610-011 | 10.0 FT [3.0 M] | 32.0 IN [812.8 MM] | BLACK |
| 466-106-520-D | 121-610-001 | 10.0 FT [3.0 M] | 32.0 IN [812.8 MM] | SILVER SATIN |
| 466-076-525-D | 121-610-020 | 7.0 FT [2.1 M] | 24.0 IN [609.6 MM] | WHITE |
| 466-076-524-D | 121-610-010 | 7.0 FT [2.1 M] | 24.0 IN [609.6 MM] | BLACK |
| 466-076-523-D | 121-610-000 | 7.0 FT [2.1 M] | 24.0 IN [609.6 MM] | SILVER SATIN |
| 466-056-522-D | 121-610-023 | 5.0 FT [1.5 M] | 18.0 IN [457.2 MM] | WHITE |
| 466-056-521-D | 121-610-013 | 5.0 FT [1.5 M] | 18.0 IN [457.2 MM] | BLACK |
| 466-056-520-D | 121-610-003 | 5.0 FT [1.5 M] | 18.0 IN [457.2 MM] | SILVER SATIN |

TABULATION BLOCK

| ITEM | QTY | MFG. | IDI PART NO. | DESCRIPTION |
|---|---|---|---|---|
| 2 | "X" FT | IDI | SEE "TABULATION BLOCK" | MODULAR COIL CABLE, 26 AWG (7/34) BARE COPPER, 6 CONDUCTOR, UNSHIELDED, PVC JACKET, (SEE TABULATION BLOCK FOR COLOR). |
| 1 | 1 PC | IDI | 325-661-50X | CONNECTOR, MODULAR PLUG, 6 POSITION, 6 CONDUCTOR, 50u" Au, FLAT TYPE EXIT. |

CABLE ASSEMBLY PARTS LIST

THIRD ANGLE PROJECTION

UNLESS OTHERWISE NOTED:
1) DIMENSIONS ARE IN INCHES (MILLIMETER)
2) TOLERANCES:
X.XX ± 0.25 (6.35)

I/O INTERCONNECT
SANTA ANA, CALIFORNIA

TITLE: 6P6C COIL CABLE TO OPEN END, CABLE ASSEMBLY

PART NO.: 466-XX6-52X-D
DWG NO.: 466-XX6-52X-D
CUSTOMER: DIGI KEY
REV. X2
SCALE: NONE
SHEET 1 OF 1

THESE DRAWINGS AND SPECIFICATIONS ARE THE SOLE PROPERTY OF I/O INTERCONNECT INC., U.S.A. AND SHALL NOT BE REPRODUCED, COPIED, OR USED IN ANY MANNER WITHOUT THE PRIOR WRITTEN CONSENT OF I/O INTERCONNECT INC. OR ITS AFFILIATED SUBSIDIARIES.

| DWG. NO. | ZONE | REV. | DESCRIPTION | DATE | APPROVED |
|---|---|---|---|---|---|
| XX6-50X-D | | X1 | CUSTOMER APPROVAL | 03/26/99 | E.W. |
| | | X2 | ADD RETRACTED LENGTH | 03/29/99 | E.W. |

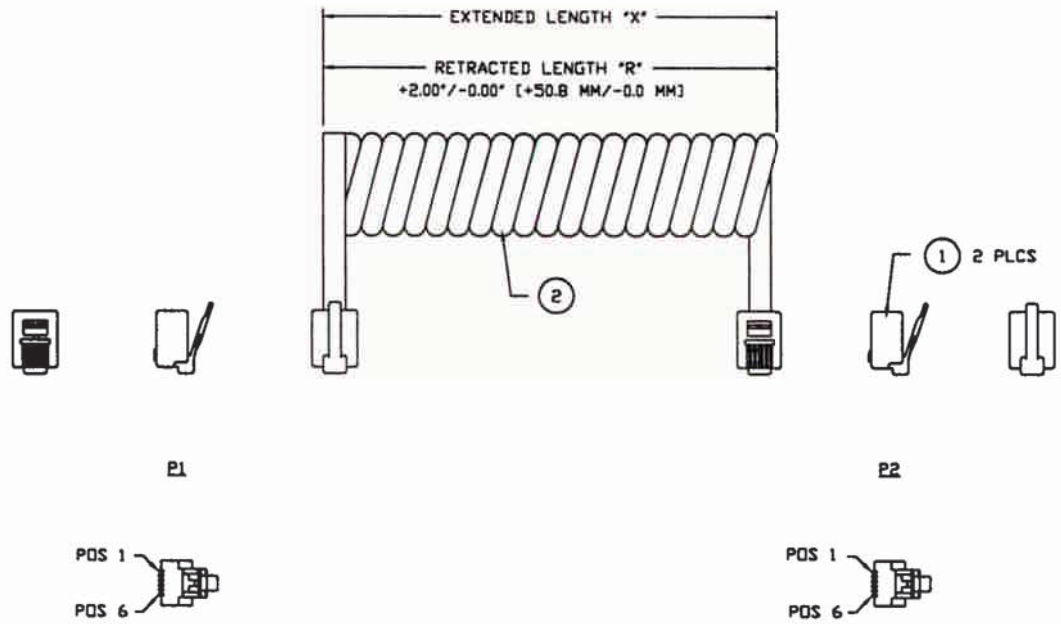


WIRE DIAGRAM

| P1 | | P2 |
|---|---|---|
| 1 | WHITE | 1 |
| 2 | BLACK | 2 |
| 3 | RED | 3 |
| 4 | GREEN | 4 |
| 5 | YELLOW | 5 |
| 6 | BLUE | 6 |

| 101 PART NUMBER | 101 CABLE PART NUMBER | EXTENDED LENGTH "X" | RETRACTED LENGTH "R" | COLOR |
|---|---|---|---|---|
| 466-146-505-D | 121-610-022 | 14.0 FT [4.3 M] | 44.0 IN [1117.6 MM] | WHITE |
| 466-146-504-D | 121-610-012 | 14.0 FT [4.3 M] | 44.0 IN [1117.6 MM] | BLACK |
| 466-146-503-D | 121-610-002 | 14.0 FT [4.3 M] | 44.0 IN [1117.6 MM] | SILVER SATIN |
| 466-106-502-D | 121-610-021 | 10.0 FT [3.0 M] | 32.0 IN [812.8 MM] | WHITE |
| 466-106-501-D | 121-610-011 | 10.0 FT [3.0 M] | 32.0 IN [812.8 MM] | BLACK |
| 466-106-500-D | 121-610-001 | 10.0 FT [3.0 M] | 32.0 IN [812.8 MM] | SILVER SATIN |
| 466-076-505-D | 121-610-020 | 7.0 FT [2.1 M] | 24.0 IN [609.6 MM] | WHITE |
| 466-076-504-D | 121-610-010 | 7.0 FT [2.1 M] | 24.0 IN [609.6 MM] | BLACK |
| 466-076-503-D | 121-610-000 | 7.0 FT [2.1 M] | 24.0 IN [609.6 MM] | SILVER SATIN |
| 466-056-502-D | 121-610-023 | 5.0 FT [1.5 M] | 18.0 IN [457.2 MM] | WHITE |
| 466-056-501-D | 121-610-013 | 5.0 FT [1.5 M] | 18.0 IN [457.2 MM] | BLACK |
| 466-056-500-D | 121-610-003 | 5.0 FT [1.5 M] | 18.0 IN [457.2 MM] | SILVER SATIN |

TABULATION BLOCK

CUSTOMER APPROVAL
ENGR. SIGN Matt Nemec
DATE: 4-13-99

NOTES: UNLESS OTHERWISE SPECIFIED.

1. TEST CABLE FOR ALL OPENS & SHORTS.
2. PACKAGE CABLE ASSEMBLY INDIVIDUALLY IN PLASTIC BAG. PACKAGE INDIVIDUAL BAG PER LOT NUMBER QUANTITIES.

| ITEM | QTY | MFG. | 101 PART NO. | DESCRIPTION |
|---|---|---|---|---|
| 2 | "X" FT | 101 | SEE "TABULATION BLOCK" | MODULAR COIL CABLE, 26 AWG (7/34) BARE COPPER, 6CONDUCTOR, UNSHIELDED, PVC JACKET, (SEE TABULATION BLOCK FOR COLOR). |
| 1 | 2 PCS | 101 | 325-661-50X | CONNECTOR, MODULAR PLUG, 6 POSITION, 6 CONDUCTOR, 50u" Au, FLAT TYPE EXIT. |

CABLE ASSEMBLY PARTS LIST

THIRD ANGLE PROJECTION

UNLESS OTHERWISE NOTED:
1) DIMENSIONS ARE IN INCHES (MILLIMETER)
2) TOLERANCES: X.XX ± 0.25 (6.35)

I/O INTERCONNECT
SANTA ANA, CALIFORNIA

TITLE: 6P6C/6P6C COIL CABLE, REVERSE STYLE, CABLE ASSEMBLY

PART NO.: 466-XX6-50X-D
DWG NO.: 466-XX6-50X-D
CUSTOMER: DIGI KEY
REV. X2
SCALE: NONE
SHEET 1 OF 1

THESE DRAWINGS AND SPECIFICATIONS ARE THE SOLE PROPERTY OF I/O INTERCONNECT INC., U.S.A. AND SHALL NOT BE REPRODUCED, COPIED, OR USED IN ANY MANNER WITHOUT THE PRIOR WRITTEN CONSENT OF I/O INTERCONNECT INC. OR ITS AFFILIATED SUBSIDIARIES.

| DWG. NO. | ZONE | REV. | DESCRIPTION | DATE | APPROVED |
|---|---|---|---|---|---|
| XX6-51X-D | | X1 | CUSTOMER APPROVAL | 03/26/99 | E.W. |
| | | X2 | ADD RETRACTED LENGTH | 03/29/99 | E.W. |

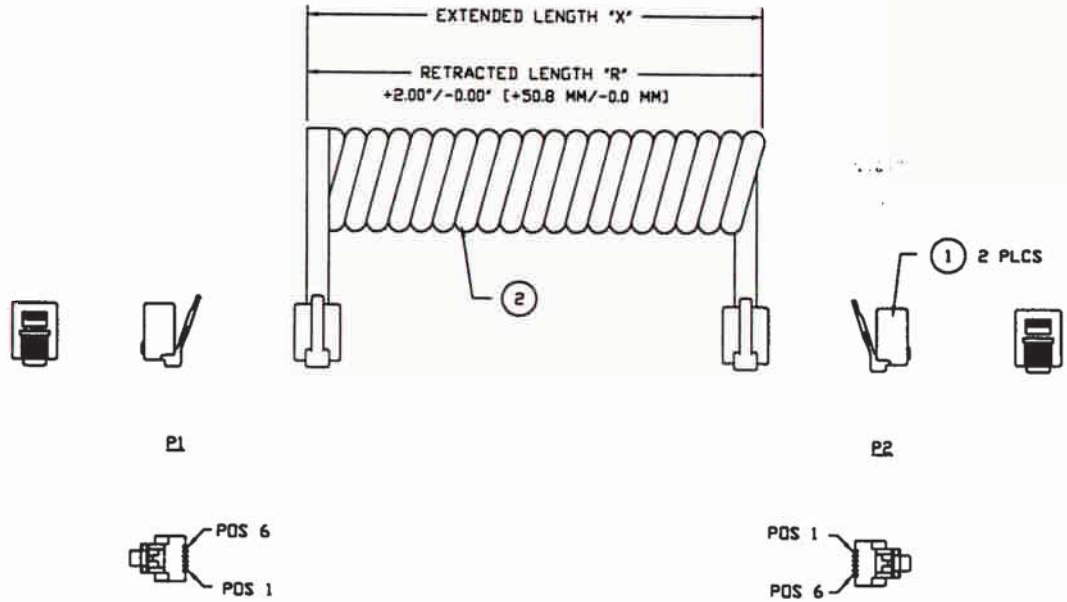


WIRE DIAGRAM

| P1 | | P2 |
|---|---|---|
| 1 | WHITE | 6 |
| 2 | BLACK | 5 |
| 3 | RED | 4 |
| 4 | GREEN | 3 |
| 5 | YELLOW | 2 |
| 6 | BLUE | 1 |

| 101 PART NUMBER | 101 CABLE PART NUMBER | EXTENDED LENGTH "X" | RETRACTED LENGTH "R" | |
|---|---|---|---|---|
| 466-146-515-D | 121-610-022 | 14.0 FT [4.3 M] | 44.0 IN [1117.6 MM] | WHITE |
| 466-146-514-D | 121-610-012 | 14.0 FT [4.3 M] | 44.0 IN [1117.6 MM] | BLACK |
| 466-146-513-D | 121-610-002 | 14.0 FT [4.3 M] | 44.0 IN [1117.6 MM] | SILVER SATIN |
| 466-106-512-D | 121-610-021 | 10.0 FT [3.0 M] | 32.0 IN [812.8 MM] | WHITE |
| 466-106-511-D | 121-610-011 | 10.0 FT [3.0 M] | 32.0 IN [812.8 MM] | BLACK |
| 466-106-510-D | 121-610-001 | 10.0 FT [3.0 M] | 32.0 IN [812.8 MM] | SILVER SATIN |
| 466-076-515-D | 121-610-020 | 7.0 FT [2.1 M] | 24.0 IN [609.6 MM] | WHITE |
| 466-076-514-D | 121-610-010 | 7.0 FT [2.1 M] | 24.0 IN [609.6 MM] | BLACK |
| 466-076-513-D | 121-610-000 | 7.0 FT [2.1 M] | 24.0 IN [609.6 MM] | SILVER SATIN |
| 466-056-512-D | 121-610-023 | 5.0 FT [1.5 M] | 18.0 IN [457.2 MM] | WHITE |
| 466-056-511-D | 121-610-013 | 5.0 FT [1.5 M] | 18.0 IN [457.2 MM] | BLACK |
| 466-056-510-D | 121-610-003 | 5.0 FT [1.5 M] | 18.0 IN [457.2 MM] | SILVER SATIN |

TABULATION BLOCK

CUSTOMER APPROVAL
ENGR. SIGN Matt Nemec
DATE: 4-13-99

NOTES: UNLESS OTHERWISE SPECIFIED.

1. TEST CABLE FOR ALL OPENS & SHORTS.
2. PACKAGE CABLE ASSEMBLY INDIVIDUALLY IN PLASTIC BAG. PACKAGE INDIVIDUAL BAG PER LOT NUMBER QUANTITIES.

| ITEM | QTY | MFG. | 101 PART NO. | DESCRIPTION |
|---|---|---|---|---|
| 2 | "X" FT | 101 | SEE "TABULATION BLOCK" | MODULAR COIL CABLE, 26 AWG (7/34) BARE COPPER, 6 CONDUCTOR, UNSHIELDED, PVC JACKET, (SEE TABULATION BLOCK FOR COLOR). |
| 1 | 2 PCS | 101 | 325-661-50X | CONNECTOR, MODULAR PLUG, 6 POSITION, 6 CONDUCTOR, 50u" Au, FLAT TYPE EXIT. |

CABLE ASSEMBLY PARTS LIST

THIRD ANGLE PROJECTION

UNLESS OTHERWISE NOTED:
1) DIMENSIONS ARE IN INCHES (MILLIMETER)
2) TOLERANCES:
X.XX ± 0.25 (6.35)

I/O INTERCONNECT
SANTA ANA, CALIFORNIA

TITLE: 6P6C/6P6C COIL CABLE, STANDARD STYLE, CABLE ASSEMBLY

PART NO: 466-XX6-51X-D
DWG NO: 466-XX6-51X-D
CUSTOMER: DIGI KEY
REV. X2
SCALE: NONE
SHEET 1 OF 1

THESE DRAWINGS AND SPECIFICATIONS ARE THE SOLE PROPERTY OF I/O INTERCONNECT INC., U.S.A. AND SHALL NOT BE REPRODUCED, COPIED, OR USED IN ANY MANNER WITHOUT THE PRIOR WRITTEN CONSENT OF I/O INTERCONNECT INC. OR ITS AFFILIATED SUBSIDIARIES.

| DWG. NO. | ZONE | REV. | DESCRIPTION | DATE | APPROVED |
|---|---|---|---|---|---|
| XX6-512-D | | X1 | CUSTOMER APPROVAL | 03/24/99 | E.W. |

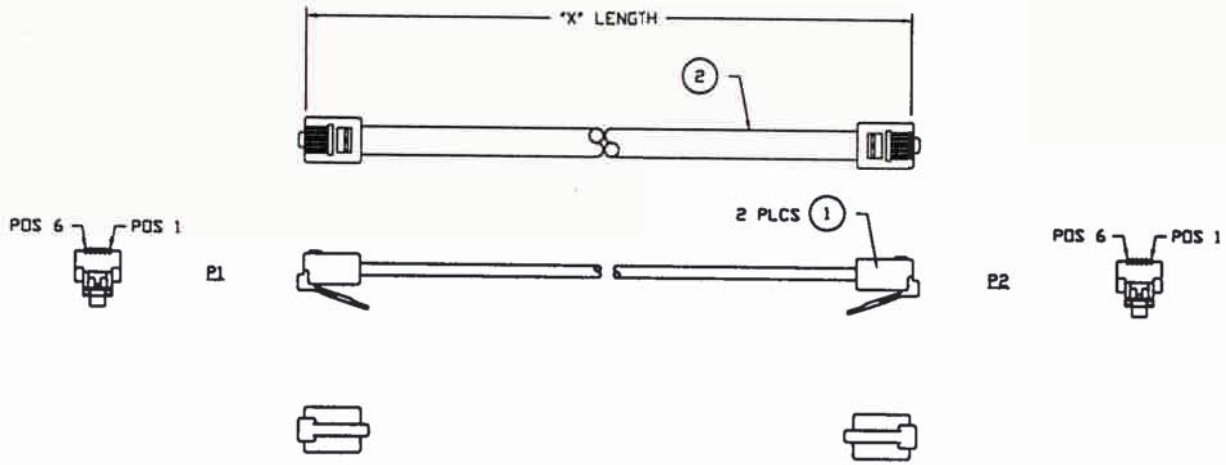


WIRE DIAGRAM

| P1 | | P2 |
|---|---|---|
| 1 | WHITE | 6 |
| 2 | BLACK | 5 |
| 3 | RED | 4 |
| 4 | GREEN | 3 |
| 5 | YELLOW | 2 |
| 6 | BLUE | 1 |

CUSTOMER APPROVAL
ENGR. SIGN Matt Nemec
DATE: 4-12-99

NOTES: UNLESS OTHERWISE SPECIFIED.

1. CABLE TO BE BUNDLED AND TWIST TIED.
2. TEST CABLE FOR ALL OPENS & SHORTS.
3. PACKAGE CABLE ASSEMBLY INDIVIDUALLY IN PLASTIC BAG. PACKAGE INDIVIDUAL BAG PER LOT NUMBER QUANTITIES.

H1661-25-ND
H1661-14-ND
H1661-07-ND

| PART NUMBER I/O INTERCONNECT | LENGTH "X" |
|---|---|
| 466-256-512-D | 25.0 FT ± 4.0 IN<br>7.62 M ± 101.6 MM |
| 466-146-512-D | 14.0 FT ± 3.0 IN<br>4.27 M ± 76.2 MM |
| 466-076-512-D | 7.0 FT ± 2.0 IN<br>2.13 M ± 50.8 MM |

| ITEM | QTY | MFG. | IOI PART NO. | DESCRIPTION |
|---|---|---|---|---|
| 2 | "X" | IOI | 120-610-020 | MODULAR CABLE, 26 AWG (7/34) BARE COPPER, 6 CONDUCTOR, UNSHIELDED, WHITE PVC. |
| 1 | 2 PCS | IOI | 325-661-50X | CONNECTOR, MODULAR PLUG, 6 POSITION, 6 CONDUCTOR, 50u" Au, FLAT TYPE EXIT. |

CABLE ASSEMBLY PARTS LIST

THIRD ANGLE PROJECTION

UNLESS OTHERWISE NOTED:
1) DIMENSIONS ARE IN INCHES [MILLIMETER]
2) TOLERANCES:
X.XX ± 0.25 [6.35]

I/O INTERCONNECT
SANTA ANA, CALIFORNIA

TITLE: 6P6C MODULAR, STANDARD STYLE, WHITE, CABLE ASSEMBLY

PART NO.: 466-XX6-512-D
DWG NO.: 466-XX6-512-D
CUSTOMER: DIGI KEY
REV. X1
SCALE: NONE
SHEET 1 OF 1

THESE DRAWINGS AND SPECIFICATIONS ARE THE SOLE PROPERTY OF I/O INTERCONNECT INC., U.S.A. AND SHALL NOT BE REPRODUCED, COPIED, OR USED IN ANY MANNER WITHOUT THE PRIOR WRITTEN CONSENT OF I/O INTERCONNECT INC. OR ITS AFFILIATED SUBSIDIARIES.

| DWG. NO. | ZONE | REV. | DESCRIPTION | DATE | APPROVED |
|---|---|---|---|---|---|
| XX6-511-D | | X1 | CUSTOMER APPROVAL | 03/24/99 | E.V. |

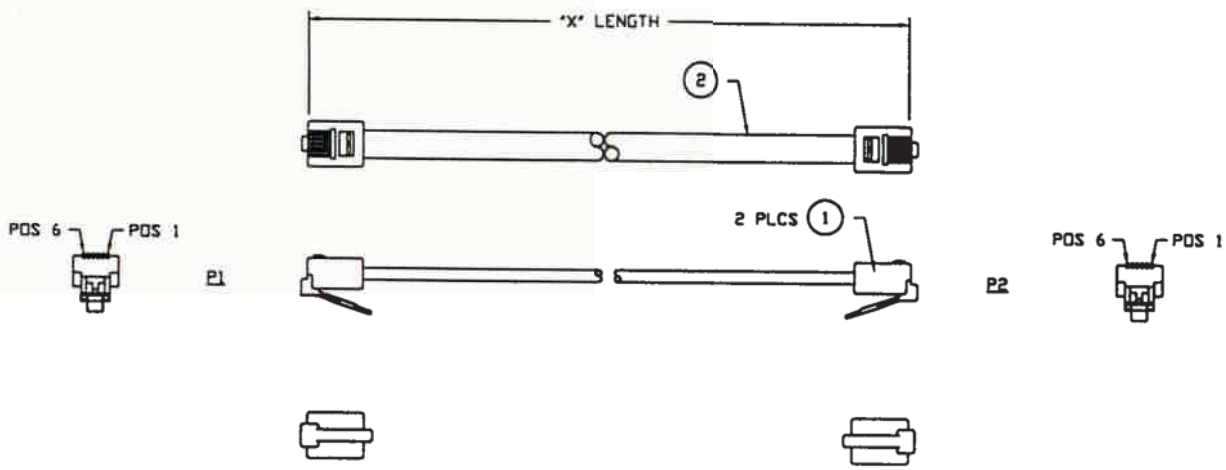


WIRE DIAGRAM

| P1 | | P2 |
|---|---|---|
| 1 | WHITE | 6 |
| 2 | BLACK | 5 |
| 3 | RED | 4 |
| 4 | GREEN | 3 |
| 5 | YELLOW | 2 |
| 6 | BLUE | 1 |

CUSTOMER APPROVAL
ENGR. SIGN Matt Nemec
DATE: 4-12-99

NOTES: UNLESS OTHERWISE SPECIFIED.

1. CABLE TO BE BUNDLED AND TWIST TIED.
2. TEST CABLE FOR ALL OPENS & SHORTS.
3. PACKAGE CABLE ASSEMBLY INDIVIDUALLY IN PLASTIC BAG. PACKAGE INDIVIDUAL BAG PER LOT NUMBER QUANTITIES.

H1662-25-ND
H1662-14-ND
H1662-07-ND

| PART NUMBER I/O INTERCONNECT | LENGTH "X" |
|---|---|
| 466-256-511-D | 25.0 FT ± 4.0 IN<br>7.62 M ± 101.6 MM |
| 466-146-511-D | 14.0 FT ± 3.0 IN<br>4.27 M ± 76.2 MM |
| 466-076-511-D | 7.0 FT ± 2.0 IN<br>2.13 M ± 50.8 MM |

| ITEM | QTY | MFG. | IOI PART NO. | DESCRIPTION |
|---|---|---|---|---|
| 2 | "X" | IOI | 120-610-010 | MODULAR CABLE, 26 AWG (7/34) BARE COPPER, 6 CONDUCTOR, UNSHIELDED, BLACK PVC. |
| 1 | 2 PCS | IOI | 325-661-50X | CONNECTOR, MODULAR PLUG, 6 POSITION, 6 CONDUCTOR, 50u" Au, FLAT TYPE EXIT. |

CABLE ASSEMBLY PARTS LIST

THIRD ANGLE PROJECTION

UNLESS OTHERWISE NOTED:
1) DIMENSIONS ARE IN INCHES (MILLIMETER)
2) TOLERANCES:
X.XX ± 0.25 (6.35)

I/O INTERCONNECT
SANTA ANA, CALIFORNIA

TITLE: 6P6C MODULAR, STANDARD STYLE, BLACK, CABLE ASSEMBLY

PART NO.: 466-XX6-511-D
DWG NO.: 466-XX6-511-D
CUSTOMER: DIGI KEY
REV. X1
SCALE: NONE
SHEET 1 OF 1

THESE DRAWINGS AND SPECIFICATIONS ARE THE SOLE PROPERTY OF I/O INTERCONNECT INC., U.S.A. AND SHALL NOT BE REPRODUCED, COPIED, OR USED IN ANY MANNER WITHOUT THE PRIOR WRITTEN CONSENT OF I/O INTERCONNECT INC. OR ITS AFFILIATED SUBSIDIARIES.

| DWG. NO. | ZONE | REV. | DESCRIPTION | DATE | APPROVED |
|---|---|---|---|---|---|
| XX6-510-D | | X1 | CUSTOMER APPROVAL | 03/24/99 | E.W. |

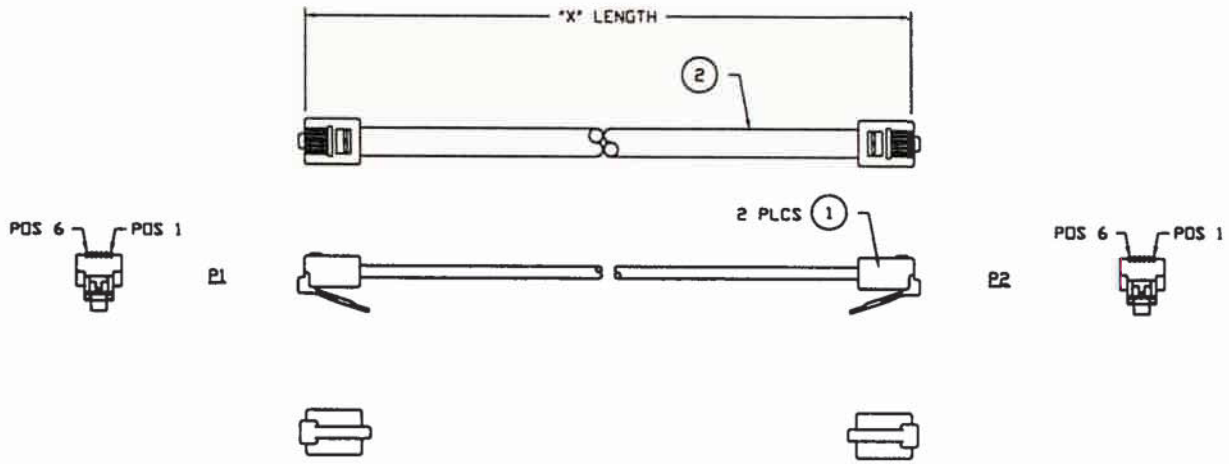


WIRE DIAGRAM

| P1 | | P2 |
|---|---|---|
| 1 | WHITE | 6 |
| 2 | BLACK | 5 |
| 3 | RED | 4 |
| 4 | GREEN | 3 |
| 5 | YELLOW | 2 |
| 6 | BLUE | 1 |

CUSTOMER APPROVAL
ENGR. SIGN Math Lemus
DATE: 4-12-99

H1663-25-ND
H1663-14-ND
H1663-07-ND

NOTES: UNLESS OTHERWISE SPECIFIED.

1. CABLE TO BE BUNDLED AND TWIST TIED.
2. TEST CABLE FOR ALL OPENS & SHORTS.
3. PACKAGE CABLE ASSEMBLY INDIVIDUALLY IN PLASTIC BAG. PACKAGE INDIVIDUAL BAG PER LOT NUMBER QUANTITIES.

| PART NUMBER I/O INTERCONNECT | LENGTH "X" |
|---|---|
| 466-256-510-D | 25.0 FT ± 4.0 IN<br>7.62 M ± 101.6 MM |
| 466-146-510-D | 14.0 FT ± 3.0 IN<br>4.27 M ± 76.2 MM |
| 466-076-510-D | 7.0 FT ± 2.0 IN<br>2.13 M ± 50.8 MM |

| ITEM | QTY | MFG. | IOI PART NO. | DESCRIPTION |
|---|---|---|---|---|
| 2 | "X" | IOI | 120-610-000 | MODULAR CABLE, 26 AWG (7/34) BARE COPPER, 6 CONDUCTOR, UNSHIELDED, SILVER SATIN PVC. |
| 1 | 2 PCS | IOI | 325-661-50X | CONNECTOR, MODULAR PLUG, 6 POSITION, 6 CONDUCTOR, 50u" Au, FLAT TYPE EXIT. |

CABLE ASSEMBLY PARTS LIST

THIRD ANGLE PROJECTION

UNLESS OTHERWISE NOTED:
1) DIMENSIONS ARE IN INCHES [MILLIMETER]
2) TOLERANCES:
X.XX ± 0.25 [6.35]

I/O INTERCONNECT
SANTA ANA, CALIFORNIA

TITLE: 6P6C MODULAR, STANDARD STYLE, SILVER SATIN, CABLE ASSEMBLY

PART NO: 466-XX6-510-D
DWG NO: 466-XX6-510-D
CUSTOMER: DIGI KEY
REV. X1
SCALE: NONE
SHEET 1 OF 1

THESE DRAWINGS AND SPECIFICATIONS ARE THE SOLE PROPERTY OF I/O INTERCONNECT INC., U.S.A. AND SHALL NOT BE REPRODUCED, COPIED, OR USED IN ANY MANNER WITHOUT THE PRIOR WRITTEN CONSENT OF I/O INTERCONNECT INC. OR ITS AFFILIATED SUBSIDIARIES.

| DWG. NO. | ZONE | REV. | DESCRIPTION | DATE | APPROVED |
|---|---|---|---|---|---|
| XX6-502-D | | X1 | CUSTOMER APPROVAL | 03/24/99 | E.W. |

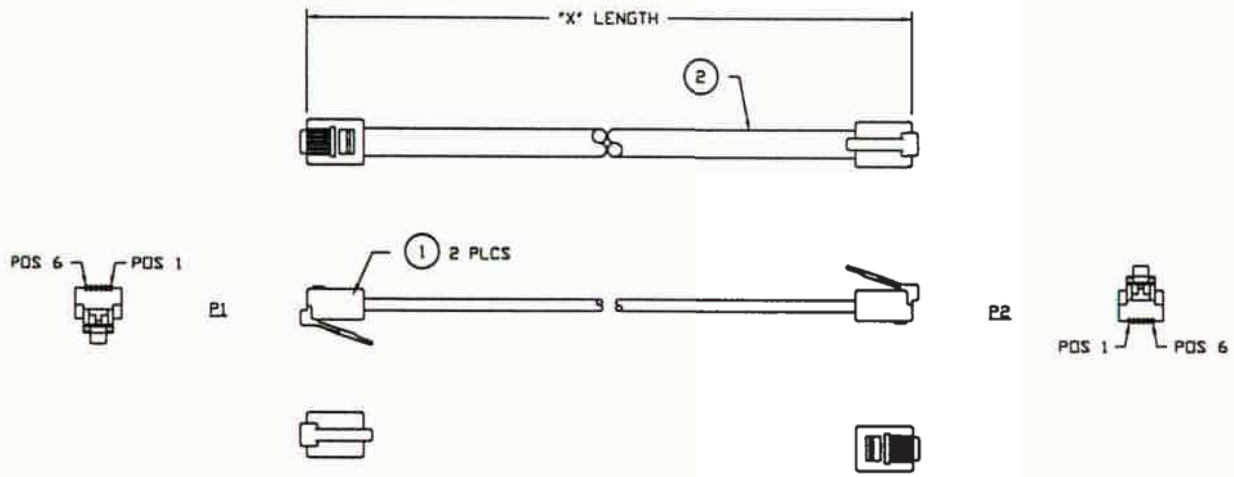


WIRE DIAGRAM

| P1 | | P2 |
|---|---|---|
| 1 | WHITE | 1 |
| 2 | BLACK | 2 |
| 3 | RED | 3 |
| 4 | GREEN | 4 |
| 5 | YELLOW | 5 |
| 6 | BLUE | 6 |

CUSTOMER APPROVAL
ENGR. SIGN Matt Nemec
DATE: 4-12-99

NOTES: UNLESS OTHERWISE SPECIFIED.

1. CABLE TO BE BUNDLED AND TWIST TIED.
2. TEST CABLE FOR ALL OPENS & SHORTS.
3. PACKAGE CABLE ASSEMBLY INDIVIDUALLY IN PLASTIC BAG. PACKAGE INDIVIDUAL BAG PER LOT NUMBER QUANTITIES.

| PART NUMBER I/O INTERCONNECT | LENGTH "X" |
|---|---|
| 466-256-502-D | 25.0 FT ± 4.0 IN<br>7.62 M ± 101.6 MM |
| 466-146-502-D | 14.0 FT ± 3.0 IN<br>4.27 M ± 76.2 MM |
| 466-076-502-D | 7.0 FT ± 2.0 IN<br>2.13 M ± 50.8 MM |

H2661-25-ND
H2661-14-ND
H2661-07-ND

| ITEM | QTY | MFG. | I01 PART NO. | DESCRIPTION |
|---|---|---|---|---|
| 2 | "X" | I01 | 120-610-020 | MODULAR CABLE, 26 AWG (7/34) BARE COPPER, 6 CONDUCTOR, UNSHIELDED, WHITE PVC. |
| 1 | 2 PCS | I01 | 325-661-50X | CONNECTOR, MODULAR PLUG, 6 POSITION, 6 CONDUCTOR, 50u" Au, FLAT TYPE EXIT. |

CABLE ASSEMBLY PARTS LIST

THIRD ANGLE PROJECTION

UNLESS OTHERWISE NOTED:
1) DIMENSIONS ARE IN INCHES (MILLIMETER)
2) TOLERANCES:
X.XX ± 0.25 (6.35)

I/O INTERCONNECT
SANTA ANA, CALIFORNIA

TITLE: 6P6C MODULAR, REVERT STYLE, WHITE, CABLE ASSEMBLY

PART NO.: 466-XX6-502-D
DWG NO.: 466-XX6-502-D
CUSTOMER: DIGI KEY
REV. X1
SCALE: NONE
SHEET 1 OF 1

THESE DRAWINGS AND SPECIFICATIONS ARE THE SOLE PROPERTY OF I/O INTERCONNECT INC., U.S.A. AND SHALL NOT BE REPRODUCED, COPIED, OR USED IN ANY MANNER WITHOUT THE PRIOR WRITTEN CONSENT OF I/O INTERCONNECT INC. OR ITS AFFILIATED SUBSIDIARIES.

| DWG. NO. | ZONE | REV. | DESCRIPTION | DATE | APPROVED |
|---|---|---|---|---|---|
| XX6-501-D | | X1 | CUSTOMER APPROVAL | 03/24/99 | E.W. |

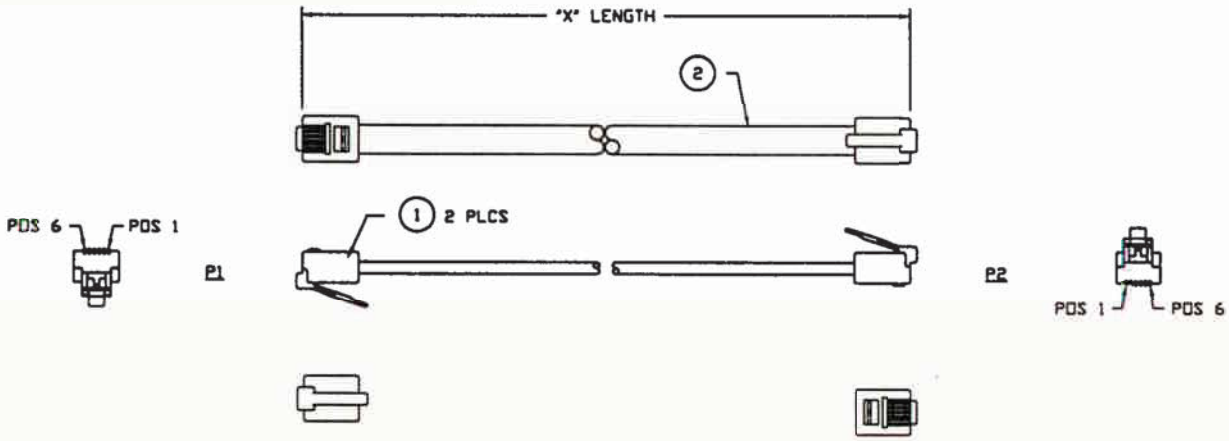


WIRE DIAGRAM

| P1 | | P2 |
|---|---|---|
| 1 | WHITE | 1 |
| 2 | BLACK | 2 |
| 3 | RED | 3 |
| 4 | GREEN | 4 |
| 5 | YELLOW | 5 |
| 6 | BLUE | 6 |

CUSTOMER APPROVAL
ENGR. SIGN Matt Nemec
DATE: 4-12-99

NOTES: UNLESS OTHERWISE SPECIFIED.

1. CABLE TO BE BUNDLED AND TWIST TIED.
2. TEST CABLE FOR ALL OPENS & SHORTS.
3. PACKAGE CABLE ASSEMBLY INDIVIDUALLY IN PLASTIC BAG. PACKAGE INDIVIDUAL BAG PER LOT NUMBER QUANTITIES.

| PART NUMBER I/O INTERCONNECT | LENGTH "X" |
|---|---|
| 466-256-501-D (H2662-25-ND) | 25.0 FT ± 4.0 IN<br>7.62 M ± 101.6 MM |
| 466-146-501-D (H2662-14-ND) | 14.0 FT ± 3.0 IN<br>4.27 M ± 76.2 MM |
| 466-076-501-D (H2662-07-ND) | 7.0 FT ± 2.0 IN<br>2.13 M ± 50.8 MM |

| ITEM | QTY | MFG. | IOI PART NO. | DESCRIPTION |
|---|---|---|---|---|
| 2 | "X" | IOI | 120-610-010 | MODULAR CABLE, 26 AWG (7/34) BARE COPPER, 6 CONDUCTOR, UNSHIELDED, BLACK PVC. |
| 1 | 2 PCS | IOI | 325-661-50X | CONNECTOR, MODULAR PLUG, 6 POSITION, 6 CONDUCTOR, 50u" Au, FLAT TYPE EXIT. |

CABLE ASSEMBLY PARTS LIST

THIRD ANGLE PROJECTION

UNLESS OTHERWISE NOTED:
1) DIMENSIONS ARE IN INCHES (MILLIMETER)
2) TOLERANCES:
X.XX ± 0.25 (6.35)

I/O INTERCONNECT
SANTA ANA, CALIFORNIA

TITLE: 6P6C MODULAR, REVERT STYLE, BLACK, CABLE ASSEMBLY

PART NO: 466-XX6-501-D
DWG NO: 466-XX6-501-D
CUSTOMER: DIGI KEY
REV. X1
SCALE: NONE
SHEET 1 OF 1

THESE DRAWINGS AND SPECIFICATIONS ARE THE SOLE PROPERTY OF I/O INTERCONNECT INC., U.S.A. AND SHALL NOT BE REPRODUCED, COPIED, OR USED IN ANY MANNER WITHOUT THE PRIOR WRITTEN CONSENT OF I/O INTERCONNECT INC. OR ITS AFFILIATED SUBSIDIARIES.

| DWG. NO. | ZONE | REV. | DESCRIPTION | DATE | APPROVED |
|---|---|---|---|---|---|
| XX6-500-D | | X1 | CUSTOMER APPROVAL | 03/24/99 | E.W. |

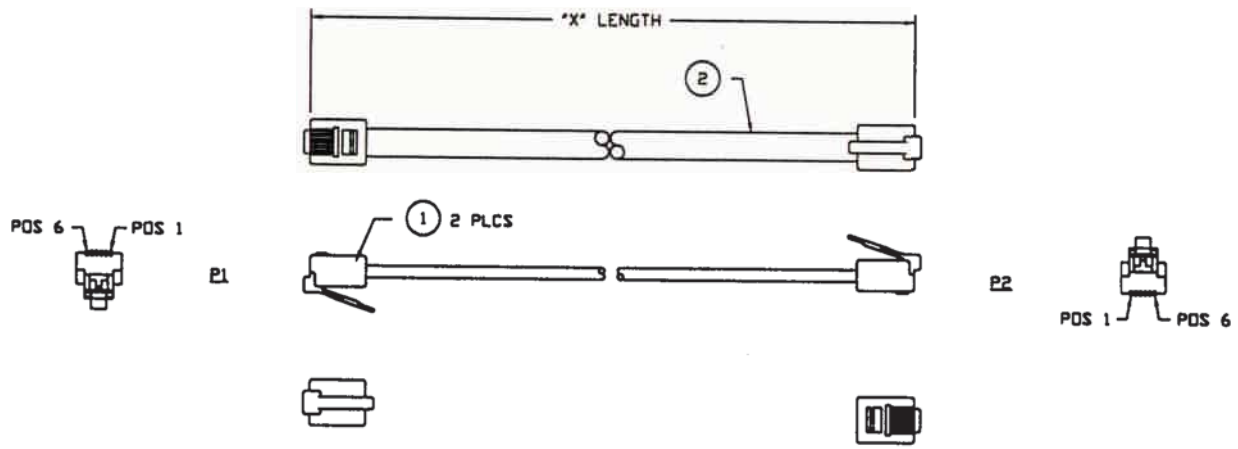


WIRE DIAGRAM

| P1 | | P2 |
|---|---|---|
| 1 | WHITE | 1 |
| 2 | BLACK | 2 |
| 3 | RED | 3 |
| 4 | GREEN | 4 |
| 5 | YELLOW | 5 |
| 6 | BLUE | 6 |

CUSTOMER APPROVAL
ENGR. SIGN Matt Nemec
DATE: 4-12-99

NOTES: UNLESS OTHERWISE SPECIFIED.

1. CABLE TO BE BUNDLED AND TWIST TIED.
2. TEST CABLE FOR ALL OPENS & SHORTS.
3. PACKAGE CABLE ASSEMBLY INDIVIDUALLY IN PLASTIC BAG. PACKAGE INDIVIDUAL BAG PER LOT NUMBER QUANTITIES.

| PART NUMBER I/O INTERCONNECT | LENGTH "X" |
|---|---|
| 466-256-500-D | 25.0 FT ± 4.0 IN<br>7.62 M ± 101.6 MM |
| 466-146-500-D | 14.0 FT ± 3.0 IN<br>4.27 M ± 76.2 MM |
| 466-076-500-D | 7.0 FT ± 2.0 IN<br>2.13 M ± 50.8 MM |

H2663-25-ND
H2663-14-ND
H2663-07-ND

| ITEM | QTY | MFG. | IOI PART NO. | DESCRIPTION |
|---|---|---|---|---|
| 2 | "X" | IOI | 120-610-000 | MODULAR CABLE, 26 AWG (7/34) BARE COPPER, 6 CONDUCTOR, UNSHIELDED, SILVER SATIN PVC. |
| 1 | 2 PCS | IOI | 325-661-50X | CONNECTOR, MODULAR PLUG, 6 POSITION, 6 CONDUCTOR, 50u" Au, FLAT TYPE EXIT. |

CABLE ASSEMBLY PARTS LIST

THIRD ANGLE PROJECTION

UNLESS OTHERWISE NOTED:
1) DIMENSIONS ARE IN INCHES (MILLIMETER)
2) TOLERANCES:
X.XX ± 0.25 (6.35)

I/O INTERCONNECT
SANTA ANA, CALIFORNIA

TITLE: 6P6C MODULAR, REVERT STYLE, SILVER SATIN, CABLE ASSEMBLY

PART NO.: 466-XX6-500-D
DWG NO.: 466-XX6-500-D
CUSTOMER: DIGI KEY
REV. X1
SCALE: NONE
SHEET 1 OF 1

THESE DRAWINGS AND SPECIFICATIONS ARE THE SOLE PROPERTY OF I/O INTERCONNECT INC., U.S.A. AND SHALL NOT BE REPRODUCED, COPIED, OR USED IN ANY MANNER WITHOUT THE PRIOR WRITTEN CONSENT OF I/O INTERCONNECT INC. OR ITS AFFILIATED SUBSIDIARIES.

| DWG. NO. | ZONE | REV. | DESCRIPTION | DATE | APPROVED |
|---|---|---|---|---|---|
| XX6-522-D | | X1 | CUSTOMER APPROVAL | 03/24/99 | E.W. |

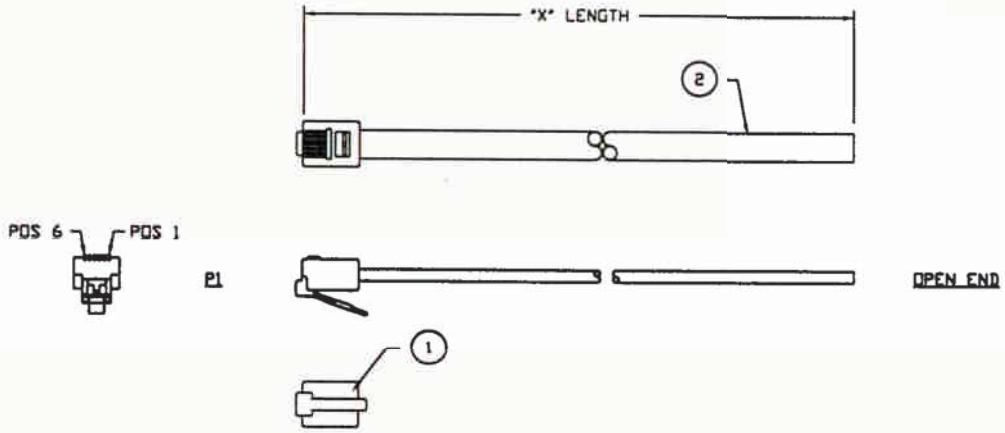


WIRE DIAGRAM

| P1 | OPEN END |
|---|---|
| 1 | WHITE |
| 2 | BLACK |
| 3 | RED |
| 4 | GREEN |
| 5 | YELLOW |
| 6 | BLUE |

CUSTOMER APPROVAL
ENGR. SIGN Matt Nemec
DATE: 4-12-99

H3661-25-ND
H3661-14-ND
H3661-07-ND

| PART NUMBER I/O INTERCONNECT | LENGTH "X" |
|---|---|
| 466-256-522-D | 25.0 FT ± 4.0 IN<br>7.62 M ± 101.6 MM |
| 466-146-522-D | 14.0 FT ± 3.0 IN<br>4.27 M ± 76.2 MM |
| 466-076-522-D | 7.0 FT ± 2.0 IN<br>2.13 M ± 50.8 MM |

NOTES: UNLESS OTHERWISE SPECIFIED.

1. CABLE TO BE BUNDLED AND TWIST TIED.
2. TEST CABLE FOR ALL OPENS & SHORTS.
3. PACKAGE CABLE ASSEMBLY INDIVIDUALLY IN PLASTIC BAG. PACKAGE INDIVIDUAL BAG PER LOT NUMBER QUANTITIES.

| ITEM | QTY | MFG. | IOI PART NO. | DESCRIPTION |
|---|---|---|---|---|
| 2 | "X" | IOI | 120-610-020 | MODULAR CABLE, 26 AWG (7/34) BARE COPPER, 6 CONDUCTOR, UNSHIELDED, WHITE PVC. |
| 1 | 1 PC | IOI | 325-661-50X | CONNECTOR, MODULAR PLUG, 6 POSITION, 6 CONDUCTOR, 50u" AU, FLAT TYPE EXIT. |

CABLE ASSEMBLY PARTS LIST

THIRD ANGLE PROJECTION

UNLESS OTHERWISE NOTED:
1) DIMENSIONS ARE IN INCHES (MILLIMETER)
2) TOLERANCES:
X.XX ± 0.25 [6.35]

I/O INTERCONNECT
SANTA ANA, CALIFORNIA

TITLE: 6P6C MODULAR, TO OPEN END, WHITE, CABLE ASSEMBLY

PART NO: 466-XX6-522-D
DWG NO: 466-XX6-522-D
CUSTOMER: DIGI KEY
REV. X1
SCALE: NONE
SHEET 1 OF 1

THESE DRAWINGS AND SPECIFICATIONS ARE THE SOLE PROPERTY OF I/O INTERCONNECT INC., U.S.A. AND SHALL NOT BE REPRODUCED, COPIED, OR USED IN ANY MANNER WITHOUT THE PRIOR WRITTEN CONSENT OF I/O INTERCONNECT INC. OR ITS AFFILIATED SUBSIDIARIES.

| DWG. NO. | ZONE | REV. | DESCRIPTION | DATE | APPROVED |
|---|---|---|---|---|---|
| XX6-521-D | | X1 | CUSTOMER APPROVAL | 03/24/99 | E.W. |

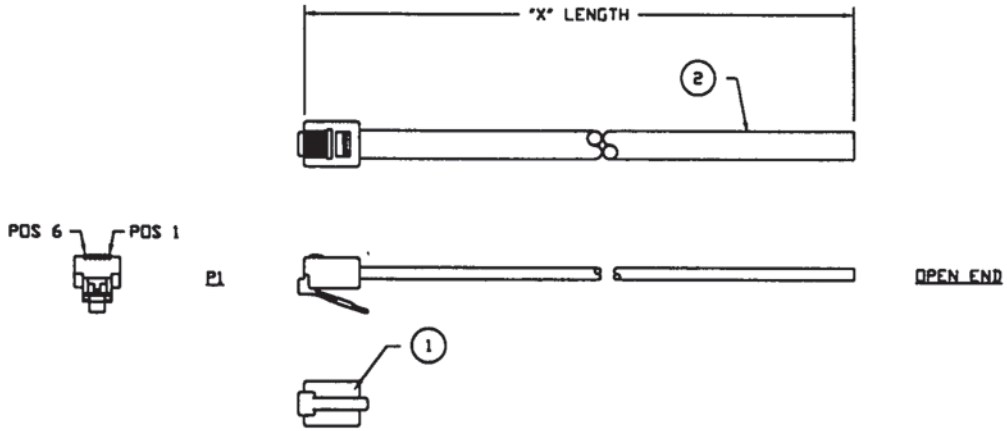


WIRE DIAGRAM

| P1 | OPEN END |
|---|---|
| 1 | WHITE |
| 2 | BLACK |
| 3 | RED |
| 4 | GREEN |
| 5 | YELLOW |
| 6 | BLUE |

CUSTOMER APPROVAL
ENGR. SIGN Matt Flamer
DATE: 4-12-99

NOTES: UNLESS OTHERWISE SPECIFIED.

1. CABLE TO BE BUNDLED AND TWIST TIED.
2. TEST CABLE FOR ALL OPENS & SHORTS.
3. PACKAGE CABLE ASSEMBLY INDIVIDUALLY IN PLASTIC BAG. PACKAGE INDIVIDUAL BAG PER LOT NUMBER QUANTITIES.

| PART NUMBER I/O INTERCONNECT | LENGTH "X" |
|---|---|
| 466-256-521-D | 25.0 FT ± 4.0 IN<br>7.62 M ± 101.6 MM |
| 466-146-521-D | 14.0 FT ± 3.0 IN<br>4.27 M ± 76.2 MM |
| 466-076-521-D | 7.0 FT ± 2.0 IN<br>2.13 M ± 50.8 MM |

H3662-25-ND
H3662-14-ND
H3662-07-ND

| ITEM | QTY | MFG. | IOI PART NO. | DESCRIPTION |
|---|---|---|---|---|
| 2 | "X" | IOI | 120-610-010 | MODULAR CABLE, 26 AWG (7/34) BARE COPPER, 6 CONDUCTOR, UNSHIELDED, BLACK PVC. |
| 1 | 1 PC | IOI | 325-661-50X | CONNECTOR, MODULAR PLUG, 6 POSITION, 6 CONDUCTOR, 50u" Au, FLAT TYPE EXIT. |

CABLE ASSEMBLY PARTS LIST

THIRD ANGLE PROJECTION

UNLESS OTHERWISE NOTED:
1) DIMENSIONS ARE IN INCHES (MILLIMETER)
2) TOLERANCES:
X.XX ± 0.25 (6.35)

I/O INTERCONNECT
SANTA ANA, CALIFORNIA

TITLE: 6P6C MODULAR, TO OPEN END, BLACK, CABLE ASSEMBLY

PART NO: 466-XX6-521-D
DWG NO: 466-XX6-521-D
CUSTOMER: DIGI KEY
REV. X1
SCALE: NONE
SHEET 1 OF 1

THESE DRAWINGS AND SPECIFICATIONS ARE THE SOLE PROPERTY OF I/O INTERCONNECT INC., U.S.A. AND SHALL NOT BE REPRODUCED, COPIED, OR USED IN ANY MANNER WITHOUT THE PRIOR WRITTEN CONSENT OF I/O INTERCONNECT INC. OR ITS AFFILIATED SUBSIDIARIES.

| DWG. NO. | ZONE | REV. | DESCRIPTION | DATE | APPROVED |
|---|---|---|---|---|---|
| XX6-520-D | | X1 | CUSTOMER APPROVAL | 03/24/99 | E.W. |

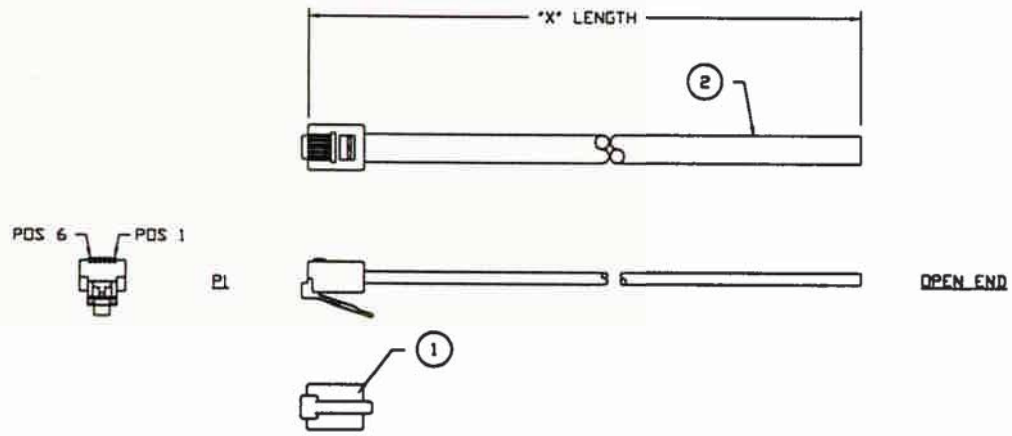


WIRE DIAGRAM

| P1 | OPEN END |
|---|---|
| 1 | WHITE |
| 2 | BLACK |
| 3 | RED |
| 4 | GREEN |
| 5 | YELLOW |
| 6 | BLUE |

CUSTOMER APPROVAL
ENGR. SIGN Matt Lemuc
DATE: 4-12-99

H3663-25-ND
H3663-14-ND
H3663-07-ND

| PART NUMBER I/O INTERCONNECT | LENGTH "X" |
|---|---|
| 466-256-520-D | 25.0 FT ± 4.0 IN<br>7.62 M ± 101.6 MM |
| 466-146-520-D | 14.0 FT ± 3.0 IN<br>4.27 M ± 76.2 MM |
| 466-076-520-D | 7.0 FT ± 2.0 IN<br>2.13 M ± 50.8 MM |

NOTES: UNLESS OTHERWISE SPECIFIED.

1. CABLE TO BE BUNDLED AND TWIST TIED.
2. TEST CABLE FOR ALL OPENS & SHORTS.
3. PACKAGE CABLE ASSEMBLY INDIVIDUALLY IN PLASTIC BAG. PACKAGE INDIVIDUAL BAG PER LOT NUMBER QUANTITIES.

| ITEM | QTY | MFG. | IOI PART NO. | DESCRIPTION |
|---|---|---|---|---|
| 2 | "X" | IOI | 120-610-000 | MODULAR CABLE, 26 AWG (7/34) BARE COPPER, 6 CONDUCTOR, UNSHIELDED, SILVER SATIN PVC. |
| 1 | 1 PC | IOI | 325-661-50X | CONNECTOR, MODULAR PLUG, 6 POSITION, 6 CONDUCTOR, 50u" Au, FLAT TYPE EXIT. |

CABLE ASSEMBLY PARTS LIST

THIRD ANGLE PROJECTION

UNLESS OTHERWISE NOTED:
1) DIMENSIONS ARE IN INCHES (MILLIMETER)
2) TOLERANCES: X.XX ± 0.25 (6.35)

I/O INTERCONNECT
SANTA ANA, CALIFORNIA

TITLE: 6P6C MODULAR, TO OPEN END, SILVER SATIN, CABLE ASSEMBLY

PART NO: 466-XX6-520-D
DWG NO: 466-XX6-520-D
CUSTOMER: DIGI KEY
REV. X1
SCALE: NONE
SHEET 1 OF 1