Date	SYM	REVISION RECORD	AUTH	DR.	CK.
02/08/03	B	(1) Ø5.36[0.211] WAS Ø5.59[0.220] (2) ADDED Ø7.52 [0.296] (3) 10.11±.25[0.398±.010] WAS 6.35±1.25 [.250±.050] (4)SPRING WAS 3 COILS	T.B.	B.S.	
03/26/10	C	REMOVED ALL TOLERANCES	T.B.	B.S.	
07/29/11	D	UPDATED TITLE	T.B.	B.S.	

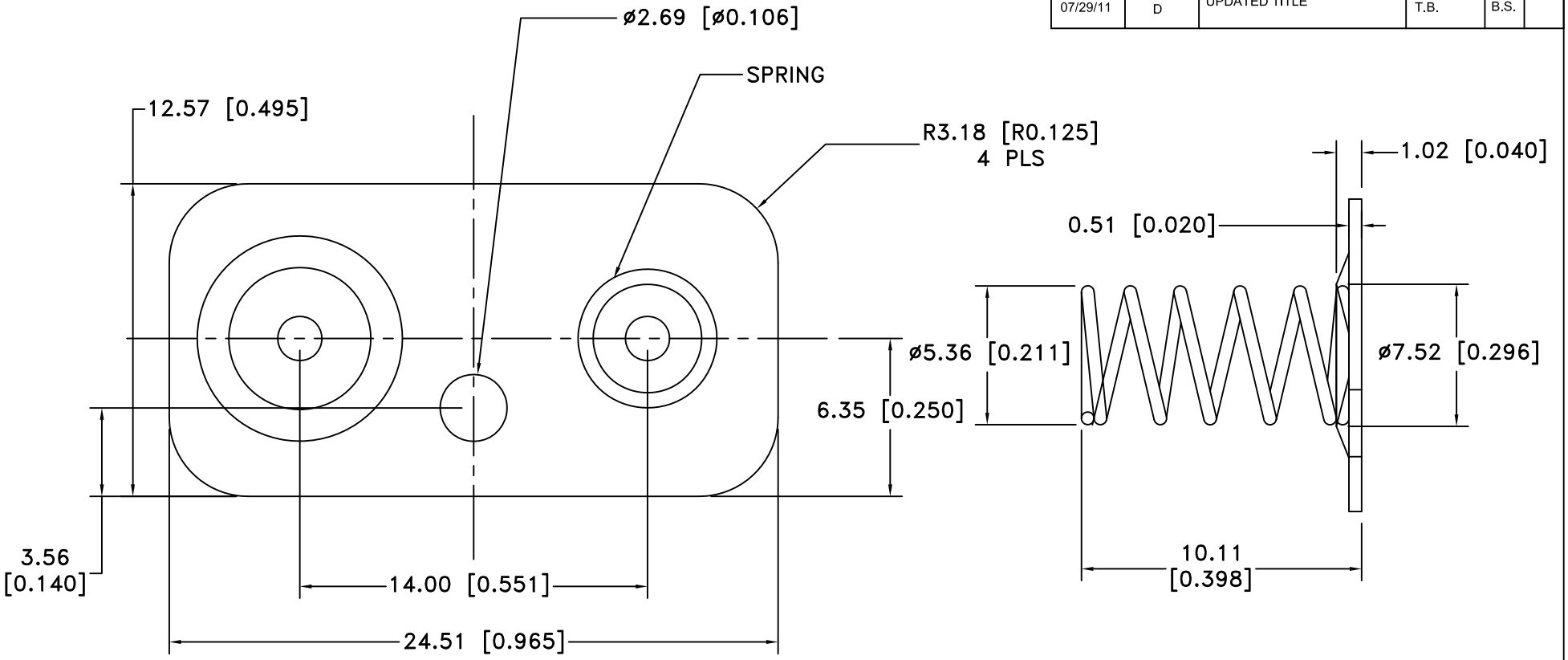

NOTES:

MATERIAL:

1. BASE PLATE: .020" STEEL, NICKLE PLTD.
2. SPRING: 0.020" SPRING STEEL, NICKLE PLTD., 5 COILS

Tolerance (Except as noted)	Memory Protection Devices, Inc 200 Broad Hollow Road, Farmingdale, New York 11735		
decimal ±.5 (.020)		Scale	Drawn By B.S. Approved By T.B.
Fractional ± .8 (.030)	Title CONTACT, DUAL "AAA"		
Angular ± 3°	Date 07/29/11	Drawing Number BK-5003	