THIS COPY IS PROVIDED ON A RESTRICTED BASIS AND IS NOT TO BE USED IN ANY WAY DETRIMENTAL TO THE INTERESTS OF PANDUIT CORP.

PANDUIT P/N	WEIGHT
CMMJ**	1.00 lb/100 PCS (456 g/100 PCS)

NOTES:
1. SEE CURRENT CATALOG FOR ADDITIONAL PART NUMBER SUFFIXES TO INDICATE COLOR AND OR PACKAGE QUANTITY.
2. MATERIAL: ADAPTER: PC/ABS
   DUST CAP: RUBBER
3. MTRJ ADAPTER IS SUPPLIED WITH TWO DUST CAPS.
4. DIMENSIONS IN PARENTHESES ARE IN METRIC.
5. REMOVE BREAKAWAY TAB TO INSTALL PLUG UPSIDE DOWN TO REVERSE THE POLARITY OF THE CONNECTION.

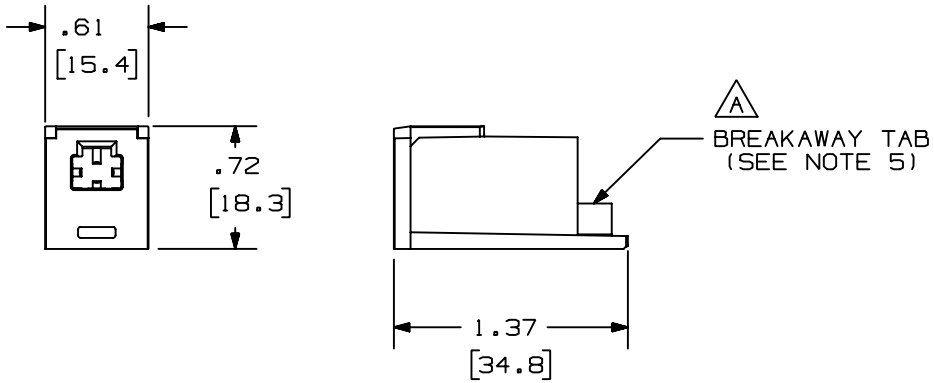

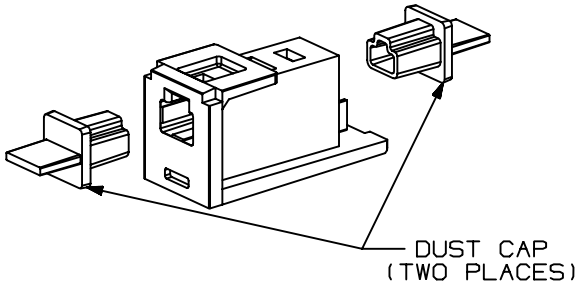

REV	DATE	BY	CHK	DESCRIPTION	ECN - R	CUST	SUP	OTH
1	04-13-00	EFK		C. REVISED TITLEBLOCK B. ADDED NOTE 5 A. ADDED BREAKAWAY TAB LABEL	00857-04			
R	03-27-00	TA	JAW	RELEASED TO PRODUCTION	00857-04	JAW	JAW	

MODEL FILENAME: M00857BB_MTRJ_ADAPT_00.PRT

CAD FILENAME/LAYERS: M00857BB_DC_00B.PRT (1)

PANDUIT CORP. TINLEY PARK, ILLINOIS

MULTIMODE MTRJ PLUG TO PLUG ADAPTER
MINI-COM MODULE (CMMJ**)
CUSTOMER DRAWING

UNLESS OTHERWISE SPECIFIED, DIMENSIONAL TOLERANCES ARE:
(.X) ± (.XXX) ±
(.XX) ± .02(.5) ANGLES ±

UNLESS OTHERWISE SPECIFIED, ALL DIMENSIONS ARE GIVEN IN INCHES, THIRD ANGLE PROJECTION.

DRAWN BY: TA
MAT'L: AS NOTED
SCALE: FULL
DATE: 03-27-00
DRAWING NO.: 00857-04
DWG SIZE: A
CHK'D: JAW