T-Series Single Pole Rocker & Paddle Switches

The predecessor to the Curvette series whose versatility has allowed it to stand the test of time. Traditional styling coupled with self cleaning contacts, integrated wire leads, a multitude of circuits, ratings, and actuator choices has made the TA/LTA-Series appeal to a wide range of markets, including Appliance, HVAC, Food service, Transportation.

Dielectric Strength
UL/CSA:
1000V - live to dead metal parts
VDE:
4000V - live to dead metal parts;
750V - across open contacts
Electrical Life
100,000 cycles
Mechanical Life
100,000 cycles
Operating Temperature
32°F to 185°F (0°C to 85°C)

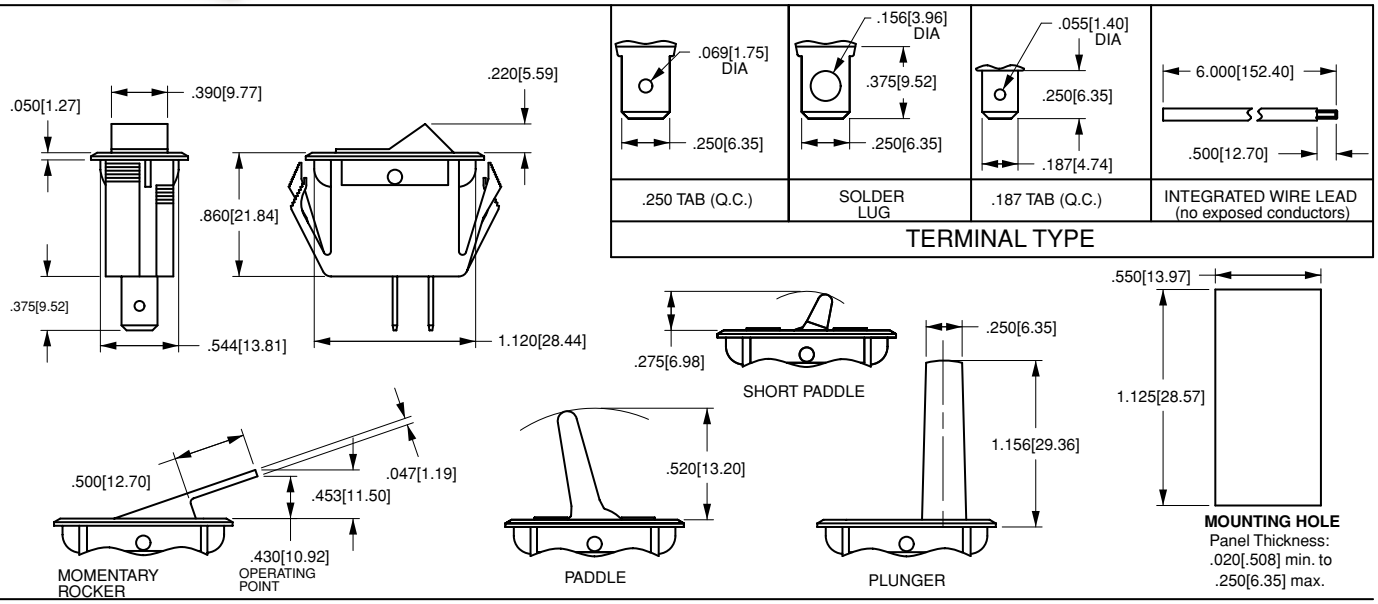

TA201	-	T	B	-	B
1 Base Part Number		*2 Actuator Style*	*3 Actuator Color*		*4 Bezel Color/Style*

1 BASE PART NUMBER: SERIES/CIRCUITRY/RATING[4]/TERMINATION

	Solder Lugs	.250 Tabs	Wire Leads
10A 250 VAC, 15A 125 VAC, 3/4 HP 125-250 VAC			
ON-NONE-OFF	**TA200**	**TA201**	**TA205**
ON-NONE-ON	**TB200**	**TB201**	**TB205**
ON-OFF-ON	**TC200**	**TC201**	**TC205**
10A 250 VAC, 15A 125 VAC, 3/4 HP 125-250 VAC, 10(4) A 250VAC T85u [6]			
ON-NONE-OFF	**TA800**	**TA801**	**TA805**
ON-NONE-ON	**TB800**	**TB801**	**TB805**
ON-OFF-ON	**TC800**	**TC801**	**TC805**
5A 250 VAC, 10A 125 VAC, 1/2 HP 125-250 VAC			
(ON)-NONE-OFF	**TA10A**	**TA10B**	**TA10F**
ON-NONE-(OFF)	**TA10L**	**TA10M**	**TA10T**
ON-NONE-(ON)	**TB10A**	**TB10B**	**TB10F**
T-SERIES W/ PLUNGER ACTUATOR[1,2]			
10A 250 VAC, 16A 125 VAC, 1/2 HP 125-250 VAC			
OFF-NONE-(ON)	-	**TA25B-PLB-B**	**TA25F-PLB-B**
ON-NONE-(OFF)	-	-	**TA25T-PLB-B**
T SERIES W/ MOMENTARY ROCKER ACTUATOR			
10A 250 VAC, 15A 125 VAC, 20A 125-250 VAC "H", 3/4 HP 125-250 VAC			
(ON)-NONE-OFF	-	**TA22B-TLB-B**	-
ON-NONE-(OFF)	-	**TA22M-TLB-B**	-

2 ACTUATOR STYLE

T	rocker	**PS**	short paddle
P	paddle		

3 ACTUATOR COLOR[5]

B	black	**W**	white

4 BEZEL COLOR[5]

B	black	**W**	white

NOTES
Imprinting is available. Consult factory.
1 Optional plunger support option is available for applications requiring extensive lateral travel, consult factory for details.
2 Maintained circuit not available with TA22 and TA25 Series.
3 .187 tab terminals also available. Consult factory for catalog number callout.
4 Additional ratings are available. Consult factory.
5 Additional colors are available. Consult factory.
6 UL, CSA & VDE Approved.
( ) Indicates momentary function.